Residential Development
Known As

AMS YORKTOWN ACTIVE ADULT COMMUNITY

800 East Main Street

Proposed By:
AMS ACQUISITIONS

JUNE 18, 2025

RECEIVED
PLANNING DEPARTMENT
JUN 18 2025
TOWN OF YORKTOWN

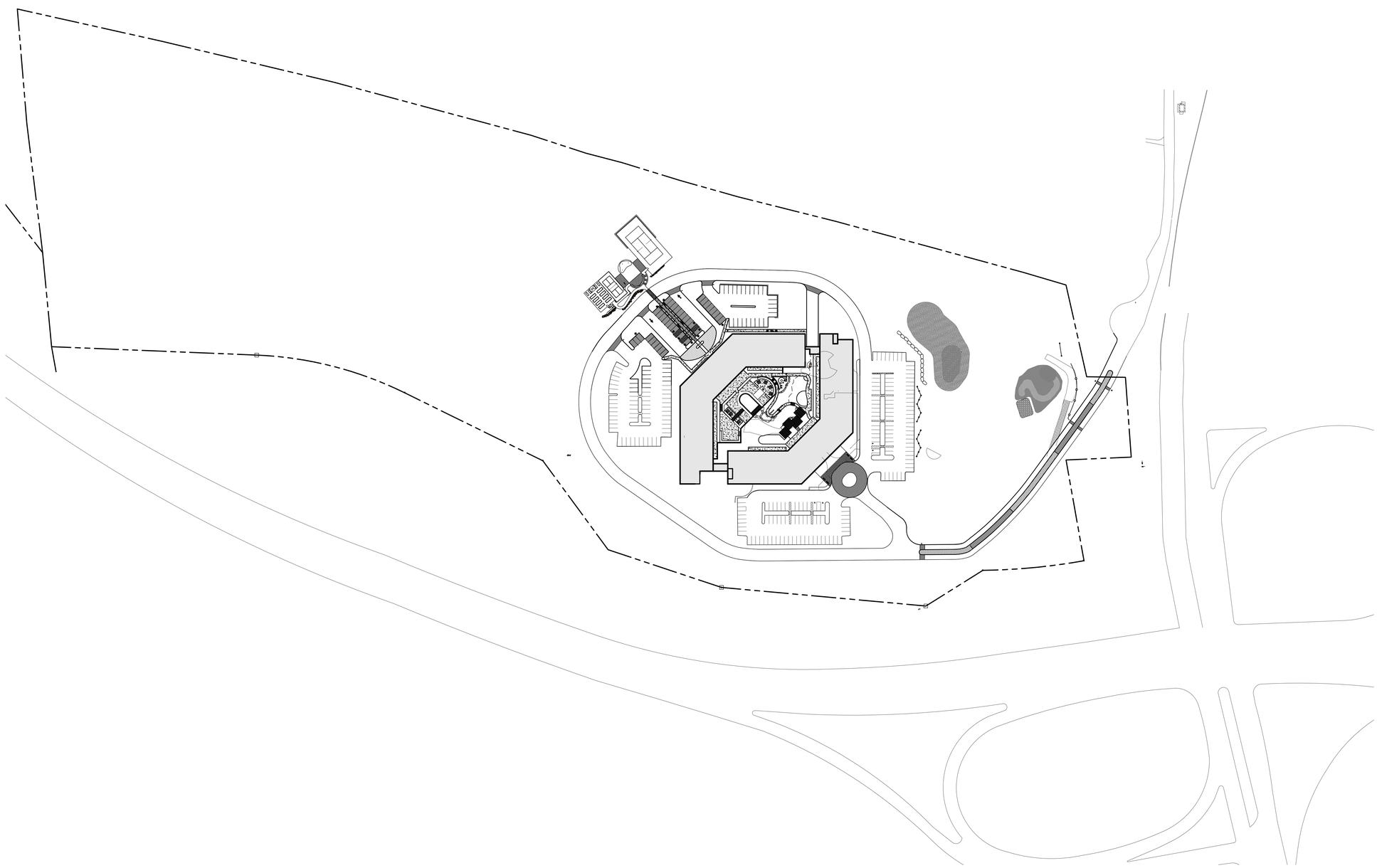

PROJECT TEAM:

OWNER / APPLICANT:
AMS Acquisitions

One Bridge Plaza North, Suite 840
Fort Lee, NJ 07024
212-695-7585

PROJECT ATTORNEY:
Janet Giris, Esq.
DelBello Donnellan Weingarten Wise & Weiderkehr, LLP
360 Hamilton Avenue, Suite 1010
White Plains, NY 10601
914-681-0200

PROJECT ENGINEER:
Joseph C. Riina, P.E.

Site Design Consultants
251 F Underhill Avenue
Yorktown Heights, NY 10598
914-962-4488

PROJECT ARCHITECT:
Seelan Pather, LEED AP

Beinfield Architecture PC
11 Chestnut St #102
South Norwalk, CT, 06854
203-838-5789

LANDSCAPE ARCHITECT:
Jason Williams, PLA, NCI

SLR Consulting
195 Church St
New Haven, Ct 06510
203-344-7955

SURVEYOR:
Craig Black, L.S.

Dynamic Survey, LLC
40 Main Street
Toms River, NJ 08753
732-687-0000

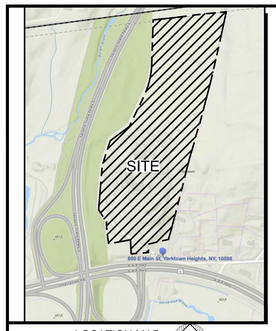

LOCATION MAP
NOT TO SCALE

SITE DATA:

OWNER / DEVELOPER:	MR. RYAN SUTHERLAND ONE BRIDGE PLAZA NORTH - SUITE 840 FORT LEE NJ 07024
PROJECT LOCATION:	800 EAST MAIN STREET JEFFERSON VALLEY YORKTOWN 10535
EXISTING TOWN ZONING:	OB RESEARCH LABORATORY AND OFFICE DISTRICT
PROPOSED USE:	RSP-2 SENIOR HOUSING
TOWN TAX MAP DATA:	5.19-1-15
SITE AREA :	32.27 ACRES (1,536,174 SF)
SEWAGE FACILITIES:	PUBLIC SEWERS
WATER FACILITIES:	PUBLIC WATER FACILITIES

PARKING SCHEDULE

REQUIRED PARKING:	0.5 PER DWELLING UNIT PLUS 10 STAFF SPACES =(0.5*180 UNITS) + 10 = 100 SPACES
PROVIDED PARKING:	262 STANDARD SPACES 9 ADA COMPLIANT SPACES
TOTAL PROVIDED PARKING:	271 SPACES
PARKING VARIANCE REQUIRED:	0 SPACES

ZONING SCHEDULE:

ZONING DISTRICT:	RSP-2, SENIOR CITIZENS DISTRICT		
DIMENSIONAL REGULATIONS:	REQUIRED	PROVIDED	VARIANCE REQUIRED
MINIMUM SIZE OF LOT:			
MINIMUM LOT AREA:	10,000 SF.	1,536,174 SF.	NONE
MINIMUM LOT DEPTH:	150 FT.	2,196 FT.	NONE
MINIMUM LOT WIDTH:	150 FT.	767 FT.	NONE
MINIMUM YARD DIMENSIONS:			
PRINCIPAL BUILDING:			
FRONT YARD SETBACK:	50 FT.	151 FT.	NONE
REAR YARD SETBACK:	50 FT.	1,338 FT.	NONE
ONE SIDE YARD SETBACK:	50 FT.	178 FT.	NONE
COMBINED SIDE YARD SETBACK:	100 FT.	178 FT.	NONE
MAXIMUM % OF LOT TO BE OCCUPIED:			
PRINCIPAL BUILDING COVERAGE:	--	--	--
FLOOR AREA RATIO	0.35	0.28	NONE
MAXIMUM HEIGHT:			
PRINCIPAL BUILDING - FEET:	55 FT.	55 FT.	NONE

ZONING REGULATION NOTES:

1. ON STREETS WITH LESS THAN A 50-FOOT RIGHT-OF-WAY, THE FRONT YARD SETBACK SHALL BE MEASURED FROM THE CENTER LINE OF THE EXISTING ROADWAY AND 25 FEET SHALL BE ADDED TO THE REQUIRED FRONT YARD SETBACK.
2. ALL MULTIFAMILY OR APARTMENT DEVELOPMENTS SHALL BE AS SPECIFIED ON A SITE PLAN APPROVED IN ACCORDANCE WITH THE PROVISIONS OF §§300-82 THROUGH 300-85.
3. THE REQUIRED REAR AND SIDE YARD SETBACKS FOR AN ACCESSORY BUILDING IN AN R1-40, R1-20, R1-10 OR R-2 ZONE SHALL BE NO LESS THAN 20 FEET WHERE THE ACCESSORY BUILDING IS (A) LOCATED WHOLLY OR PARTLY IN A REAR YARD AND (B) HAS A FOOTPRINT 50% OR GREATER THAN THAT OF THE MAIN BUILDING.
4. IN ALL MULTIFAMILY DISTRICTS, INCLUDING R-3, R-2A, RSP-1, RSP-2 AND R-3A, THE FLOOR AREA RATIO, USABLE AND THE LOT AREA (SQUARE FEET) SHALL BE CALCULATED ON THE BASIS OF NET AREA, WHICH SHALL BE DETERMINED BY SUBTRACTING FROM THE GROSS AREA OF THE SITE ALL WETLANDS AND CONTROLLED AREA AS DEFINED IN CHAPTER 178, FRESHWATER WETLANDS.
5. ON SITES GREATER THAN 25 ACRES, MAXIMUM HEIGHT (FEET) MAY BE INCREASED TO 55 FEET FOR MAIN BUILDINGS.

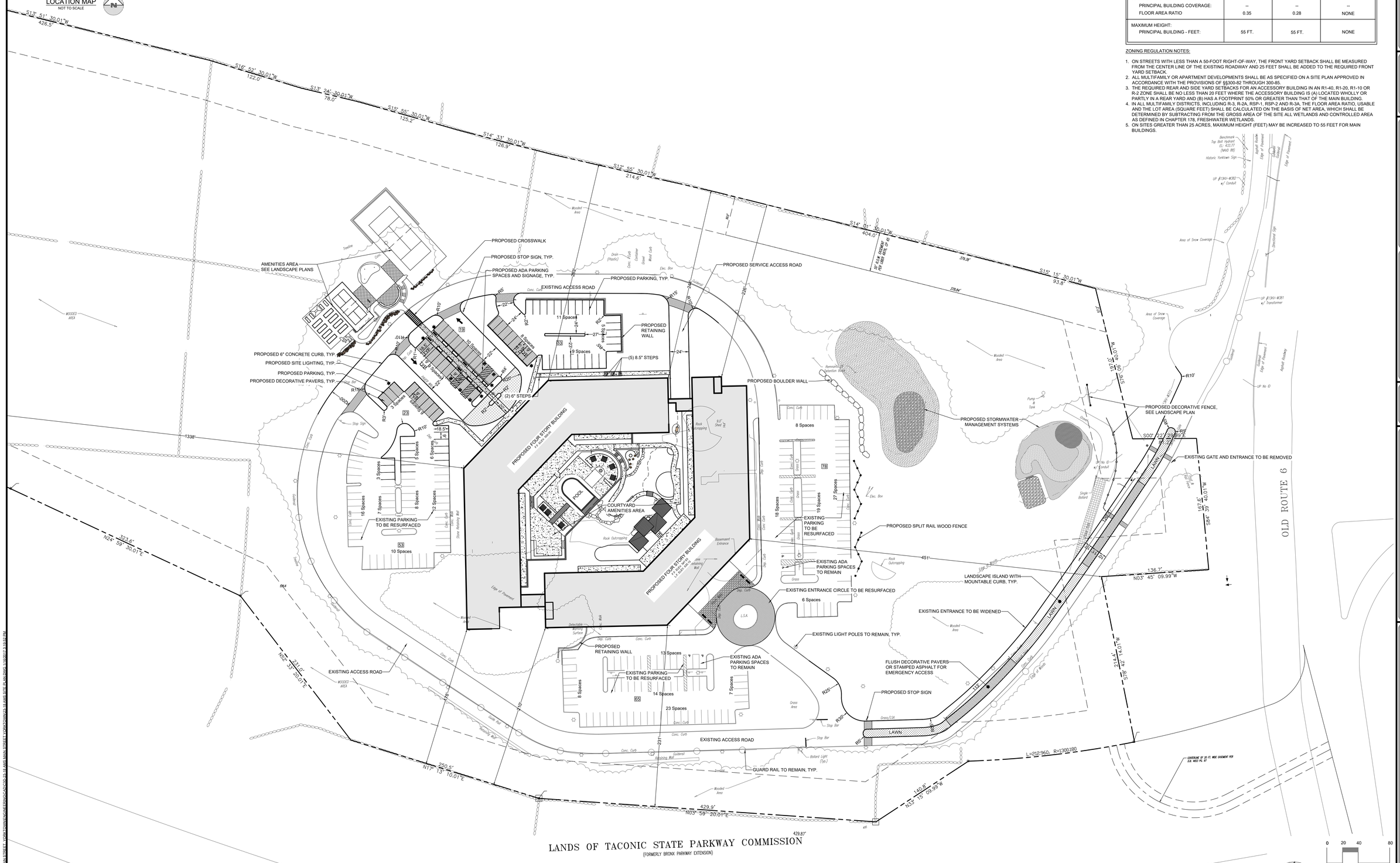

NOTE:
1. *THIS IS NOT A SURVEY*. ALL SURVEY INFORMATION SHOWN ON THIS PLAN HAS BEEN TAKEN FROM SURVEY MAP PREPARED BY DYNAMIC SURVEY, LLC., DATED 02/15/22, LAST REVISED 02/27/25. THE ENGINEER ASSUMES NO RESPONSIBILITY FOR ITS ACCURACY.

SAFE DIG
Before You Dig, Drill or Blast!
CALL UR TOLL-FREE 811 or 1-800-962-7962
NY Industrial Code Rule 753 requires no less than two full business days notice, but not more than ten days notice
www.digsafelyneyork.com

NOTE: UNAUTHORIZED ALTERATIONS OR ADDITIONS TO THIS DRAWING IS A VIOLATION OF SECTION 7209 (2) OF THE NEW YORK STATE EDUCATION LAW.

E:\2023\23-18 AMS - E MAIN STREET, YORKTOWN\ENGINEERING\ACAD\23-18 AMS MAIN STREET YORKTOWN\23-18 AMS SITE PLAN.DWG 11/03/2023 3:19:53 PM

PROJECT # 23-18

Site Design Consultants
Civil Engineers • Land Planners
251-F Underhill Avenue, Yorktown Heights, NY 10598
(914) 962-4488 - Fax: (914) 962-7386
www.sitedesignconsultants.com

COPYRIGHT © 2025 BY SITE DESIGN CONSULTANTS, ALL RIGHTS RESERVED

STATE OF NEW YORK · JOSEPH C. KIMU · NO. 075143 · LICENSED PROFESSIONAL ENGINEER
Engineer: Joseph C. Kimu, P.E.
NYS Lic. No. 075143

Revisions:		
No.	Date	Comments:

Revisions:		
No.	Date	Comments:

SCALE: 1" = 40'
DRAWN BY: AKM
DATE: 06/18/25

SITE PLAN

SITE PLAN
PREPARED FOR
AMS YORKTOWN ACTIVE ADULT COMMUNITY
800 EAST MAIN STREET
Town of Yorktown
Westchester County, NY

Sheet C-101

NOTE:
1. THIS MAP IS BASED ON ALL AVAILABLE INFORMATION SHOWN ON THIS PLAN HAS BEEN PLOTTED ACCORDING TO THE LATEST SURVEY OF THE PROPERTY AND ADJACENT PROPERTIES AVAILABLE AT THE TIME OF PREPARATION. REVISED 5/27/25. THE ENGINEER ASSUMES NO RESPONSIBILITY FOR ITS ACCURACY.

NOTE: UNAUTHORIZED ALTERATIONS OR ADDITIONS TO THIS DRAWING IS A VIOLATION OF SECTION 7209 OF THE NEW YORK STATE EDUCATION LAW

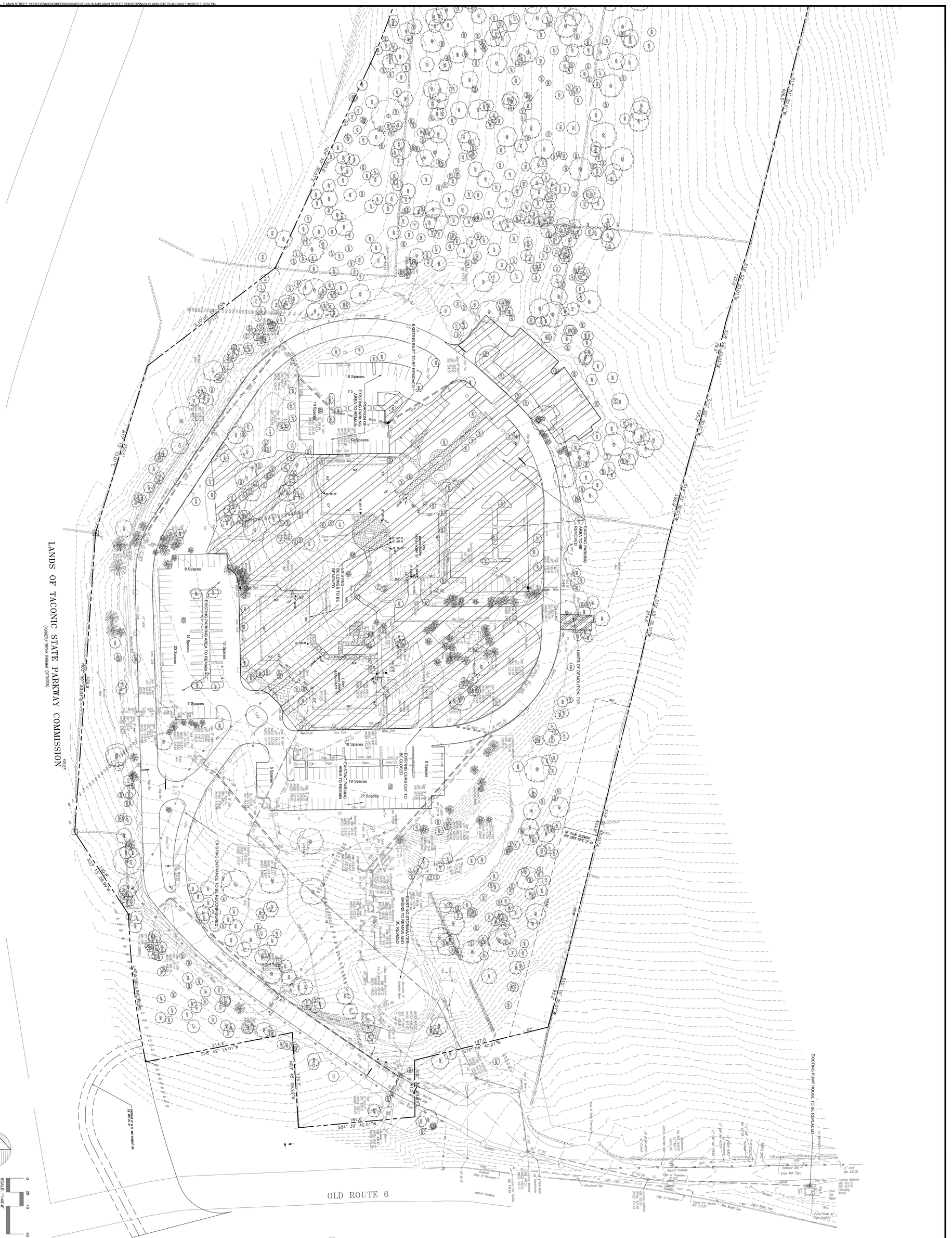
LANDS OF TACONIC STATE PARKWAY COMMISSION
(CONKLEY BRONX PARKWAY EXTENSION)
OLD ROUTE 6
EXISTING INLET TO BE REMOVED
PORTION OF EXISTING PARKING AREA TO REMAIN
EXISTING BUILDINGS TO BE REMOVED
EXISTING PARKING AREA TO REMAIN
EXISTING CURB CUT TO BE CLOSED
EXISTING ENTRANCE TO BE RECONFIGURED
EXISTING STORMWATER BASINS TO REMAIN AND BE RESIZED
EXISTING PUMP HOUSE TO BE REPLACED
LIMITS OF REMOVAL, TYP.
16 Spaces
10 Spaces
12 Spaces
8 Spaces
23 Spaces
14 Spaces
13 Spaces
7 Spaces
18 Spaces
19 Spaces
27 Spaces
6 Spaces
8 Spaces
N07° 15' 00"E 290.0'
N07° 15' 00"E 429.4'
N07° 59' 20"E 429.4'
N43° 15' 00"W 146.8'
S78° 42' 14.01"W 214.4'
N07° 15' 00"E 136.7'
S84° 39' 40.01"W 167.6'
S07° 15' 00"W 61.2'
S76° 06' 40.01"W 197.6'
S17° 15' 00"W 126.8'
S17° 15' 00"W 232.7'
S17° 15' 00"W 172.0'
S17° 15' 00"W 292.0'
S17° 15' 00"W 925.0'
N62° 59' 00"E 313.8'
N16° 30' 00"W 101.0'
N62° 59' 00"E 429.7'
N62° 59' 00"E 429.7'
N62° 59' 00"E 429.7

F:\2023\23-18 AMS – E MAIN STREET, YORKTOWN\ENGINEERING\CAD\CSD-23-18 AMS MAIN STREET YORKTOWN\23-18 AMS SITE PLAN.DWG, 1/16/2017 3:19:52 PM

NOTE:
1. THESE MAPS ARE BASED ON ALL AVAILABLE INFORMATION SHOWN ON THIS PLAN WAS SEEN ON A SURVEY PREPARED BY OTHERS. THE ENGINEER ASSUMES NO RESPONSIBILITY FOR ITS ACCURACY.
REVISED 5/27/25. THE ENGINEER ASSUMES NO RESPONSIBILITY FOR ITS ACCURACY.
NOTE: UNAUTHORIZED ALTERATION OR ADDITIONS TO THIS DRAWING IS A VIOLATION OF SECTION 7209 OF THE NEW YORK STATE EDUCATION LAW

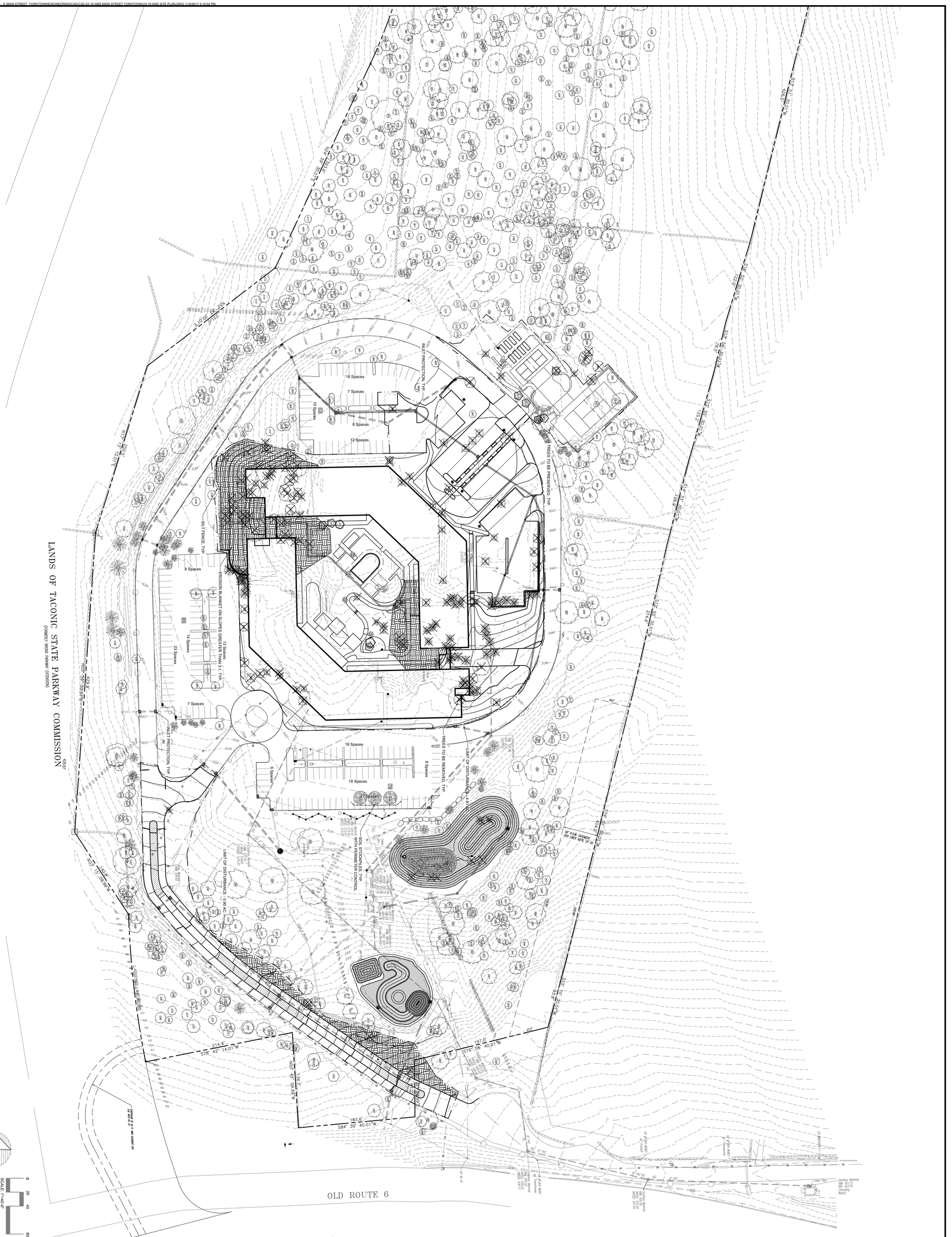

Sheet	SITE PLAN PREPARED FOR		SCALE: 1" = 40'	Revisions: No. Date Comments:	Revisions: No. Date Comments:	Engineer: STATE OF NEW YORK · JOSEPH CARLO KIUNA · NO. 64431 · LICENSED PROFESSIONAL ENGINEER	Site Design Consultants
C-103	AMS YORKTOWN ACTIVE ADULT COMMUNITY	EROSION & SEDIMENT CONTROL PLAN	DRAWN BY: AKM			Joseph C. Kiuna, P.E. NYS Lic. No. 64431	Civil Engineers • Land Planners 251-F Underhill Avenue, Yorktown Heights, NY 10598 (914) 962-4488 - Fax: (914) 962-7386 www.sitedesignconsultants.com
	Town of Yorktown 800 EAST MAIN STREET Westchester County, NY		DATE: 06/18/25				PROJECT # 23-18

COPYRIGHT © 2025 BY SITE DESIGN CONSULTANTS, ALL RIGHTS RESERVED

NOTE:
THESE BLOCK SURVEY ALL SURVEY INFORMATION SHOWN ON THIS PLAN WAS SEEN
TO BE ACCURATE AS PER SURVEY OF CHARLES A. VANDERBILT, DATED AUGUST
REVISED 5/27/25. THE ENGINEER ASSUMES NO RESPONSIBILITY FOR ITS ACCURACY.

NOTE: UNAUTHORIZED ALTERATIONS OR ADDITIONS TO THIS DRAWING IS A VIOLATION OF SECTION 7209 OF THE NEW YORK STATE EDUCATION LAW

Sheet	SITE PLAN PREPARED FOR			SCALE: 1" = 40'	Revisions: No. Date Comments:	Revisions: No. Date Comments:	Engineer: STATE OF NEW YORK · JOSEPH CARLO RIINA · LICENSED PROFESSIONAL ENGINEER · NO. 64431 Joseph C. Riina, P.E. NYS Lic. No. 64431	Site Design Consultants	
C-104	AMS YORKTOWN ACTIVE ADULT COMMUNITY	IMPROVEMENT PLAN		DRAWN BY: AKM				Civil Engineers • Land Planners 251-F Underhill Avenue, Yorktown Heights, NY 10598 (914) 962-4488 - Fax: (914) 962-7386 www.sitedesignconsultants.com	PROJECT # 23-18
	Town of Yorktown	800 EAST MAIN STREET	Westchester County, NY	DATE: 06/18/25					

COPYRIGHT © 2025 BY SITE DESIGN CONSULTANTS; ALL RIGHTS RESERVED

COPYRIGHT © 2025 BY SITE DESIGN CONSULTANTS, ALL RIGHTS RESERVED

Site Design Consultants
Civil Engineers • Land Planners
251-F Underhill Avenue, Yorktown Heights, NY 10598
(914) 962-4488 - Fax: (914) 962-7386
www.sitedesignconsultants.com

PROJECT # 23-18

Engineer
STATE OF NEW YORK
JOSEPH C. KUNZ
No. 44411
LICENSED PROFESSIONAL ENGINEER
Joseph C. Kunz, P.E.
NYS Lic. No. 44411

Revisions:
No. Date Comments:

Revisions:
No. Date Comments:

SCALE:

DRAWN BY: AKM

DATE: 06/18/25

UTILITY PROFILES

SITE PLAN
PREPARED FOR
AMS YORKTOWN ACTIVE ADULT COMMUNITY
Town of Yorktown — 800 EAST MAIN STREET — Westchester County, NY

Sheet C-105

SCALE: 1"=40'-0"

SAFE DIG
Before You Dig, Drill or Blast!
Call 811 or visit www.digsafelynewyork.com
Call811 Dig Safely New York
Dig Safely New York is a non-profit, member-driven, public service organization. Our mission is to prevent damage to underground facilities and promote public safety through education and awareness.
www.digsafelynewyork.com

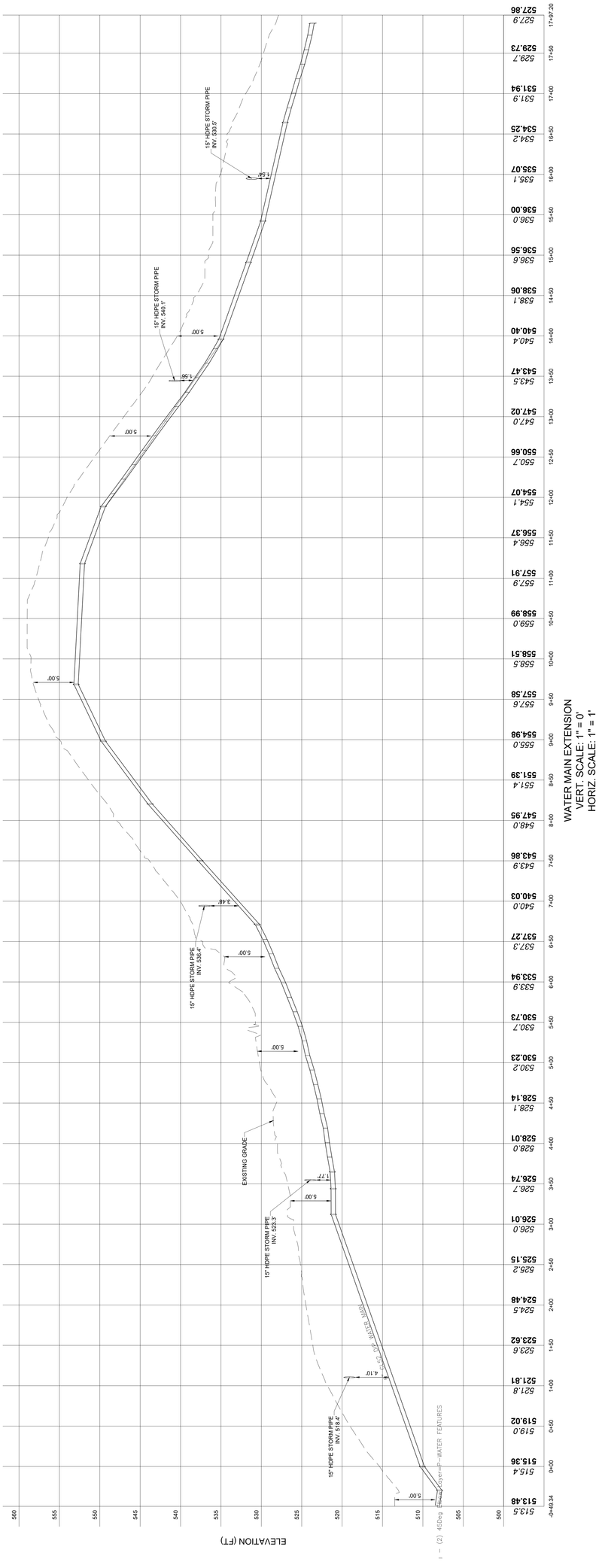

WATER MAIN EXTENSION
VERT. SCALE: 1" = 0'
HORIZ. SCALE: 1" = 1'

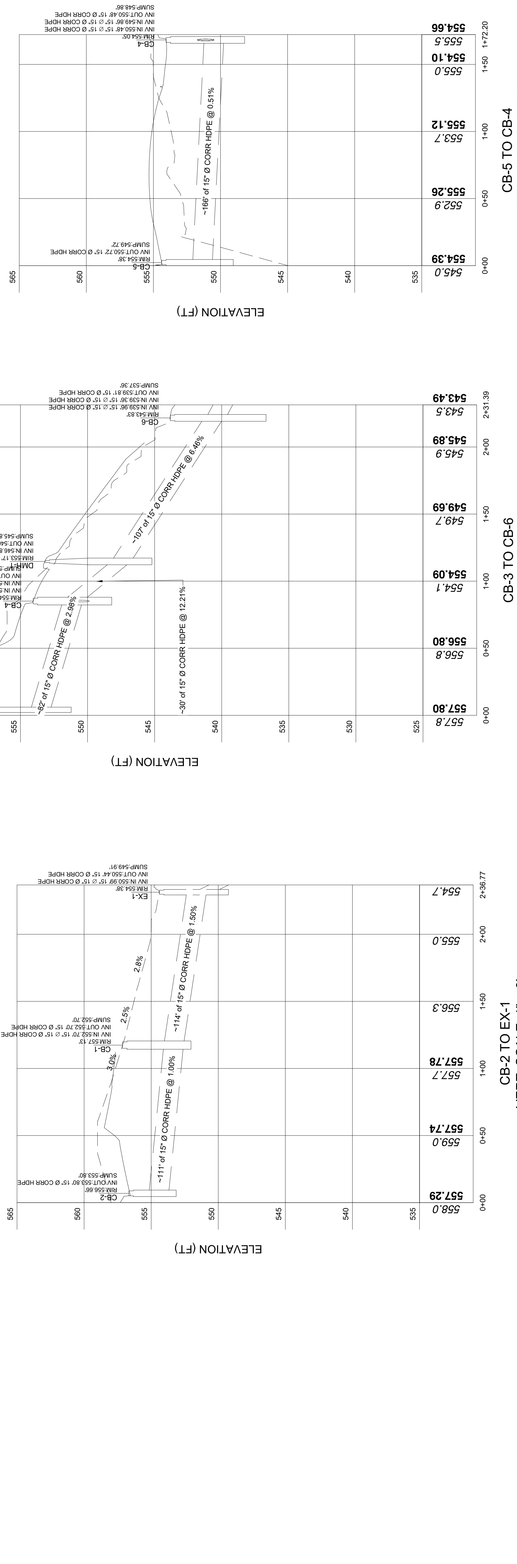

CB-5 TO CB-4
VERT. SCALE: 1" = 0'
HORIZ. SCALE: 1" = 1'

CB-3 TO CB-6
VERT. SCALE: 1" = 0'
HORIZ. SCALE: 1" = 1'

CB-2 TO EX-1
VERT. SCALE: 1" = 0'
HORIZ. SCALE: 1" = 1'

NOTE:
1. THIS IS NOT A SURVEY. ALL SURVEY INFORMATION SHOWN ON THIS PLAN HAS BEEN OBTAINED FROM SURVEYS CERTIFIED TO OTHERS AND THE ENGINEER HAS FULLY RELIED ON SUCH SURVEYS. REVISED 02/27/25 - THE ENGINEER ASSUMES NO RESPONSIBILITY FOR ITS ACCURACY.

NOTE: UNAUTHORIZED ALTERATIONS OR ADDITIONS TO THIS DRAWING IS A VIOLATION OF SECTION 7209 OF THE NEW YORK STATE EDUCATION LAW

F:\2023\23-18 AMS - E MAIN STREET YORKTOWN\ENGINEERING\CAD\23-18 AMS MAIN STREET YORKTOWN\23-18 AMS SITE PLAN DWG 1/18/2017 1:19:22 PM

TREE NO.	SIZE	SPECIES	CONDITION
3000	8	PEAR	ALIVE
3001	8	PEAR	ALIVE
3002	8	PEAR	ALIVE
3003	8	PEAR	ALIVE
3004	8	PEAR	ALIVE
3005	8	PEAR	ALIVE
3006	8	PEAR	ALIVE
3007	8	PEAR	ALIVE
3008	10	MAPLE	ALIVE
3009	10	MAPLE	ALIVE
3010	10	MAPLE	ALIVE
3011	10	MAPLE	ALIVE
3012	10	MAPLE	ALIVE
3013	10	MAPLE	ALIVE
3014	8	PEAR	ALIVE
3015	8	PEAR	ALIVE
3016	8	PEAR	ALIVE
3017	8	PEAR	ALIVE
3018	12	ELM	DISEASED
3019	12	ELM	DISEASED
3020	12	ELM	DISEASED
3021	8	MAPLE	ALIVE
3022	8	ELM	ALIVE
3023	28	OAK	ALIVE
3024	8	SYCAMORE	ALIVE
3025	8	SYCAMORE	ALIVE
3026	12	TREE OF HEAVEN	ALIVE
3027	8	COTTONWOOD	ALIVE
3028	8	WALNUT	ALIVE
3029	8	LOCUST (TWIN)	ALIVE
3030	28	COTTONWOOD	ALIVE
3031	8	PINE	ALIVE
3032	8	PINE	ALIVE
3033	8	MAPLE	ALIVE
3034	8	PINE	ALIVE
3035	8	PINE	ALIVE
3036	8	PINE	ALIVE
3037	8	PINE	ALIVE
3038	12	MAPLE	ALIVE
3039	18	ELM	ALIVE
3040	8	PINE	ALIVE
3041	15	ELM	ALIVE
3042	12	POPLAR	DEAD
3043	12	ELM	ALIVE
3044	12	ELM	ALIVE
3045	8	PEAR	ALIVE
3046	12	PEAR	ALIVE
3047	12	PINE	ALIVE
3048	12	PINE	ALIVE
3049	12	PINE	ALIVE
3050	15	PINE	ALIVE
3051	15	PINE	ALIVE
3052	8	PINE	ALIVE
3053	8	SPRUCE (TWIN)	DEAD
3054	12	ELM	ALIVE
3055	10	BASSWOOD	ALIVE
3056	10	BASSWOOD	ALIVE
3057	10	BASSWOOD	ALIVE
3058	12	PEAR	ALIVE
3059	8	PEAR	ALIVE
3060	8	PEAR	ALIVE
3061	12	BIRCH	ALIVE
3062	8	PEAR	ALIVE
3063	8	PEAR	ALIVE
3064	8	BIRCH	ALIVE
3065	12	BIRCH	ALIVE
3066	12	PEAR	ALIVE
3067	12	BASSWOOD	ALIVE
3068	12	BASSWOOD	ALIVE
3069	12	BASSWOOD	ALIVE
3070	15	PINE	ALIVE
3071	12	PINE	ALIVE
3072	12	PINE	ALIVE
3073	12	PINE	ALIVE
3074	15	PINE	ALIVE
3075	12	PINE	ALIVE
3076	12	PINE	ALIVE
3077	12	PINE	ALIVE
3078	15	PINE	ALIVE
3079	15	ELM	ALIVE
3080	15	ELM	ALIVE
3081	8	PEAR	ALIVE
3082	8	PEAR	ALIVE
3083	15	ELM	ALIVE
3084	12	ELM	ALIVE
3085	12	MAPLE	ALIVE
3086	8	PINE	ALIVE
3087	8	PINE	ALIVE
3088	8	PINE	ALIVE
3089	8	PINE	ALIVE
3090	12	PINE	ALIVE
3091	8	PINE	ALIVE
3092	24	HICKORY	ALIVE
3093	8	PINE	ALIVE
3094	12	PINE	ALIVE
3095	8	PINE	ALIVE
3096	8	PINE	ALIVE
3097	12	MAPLE	ALIVE
3098	8	PINE	ALIVE
3099	8	PINE	ALIVE
3100	18	MAPLE	ALIVE
3101	8	MAPLE	ALIVE
3102	18	MAPLE (TWIN)	ALIVE
3103	12	MAPLE	ALIVE
3104	15	HICKORY	ALIVE
3105	12	HICKORY	ALIVE
3106	12	OAK	ALIVE
3107	15	MAPLE (TWIN)	ALIVE
3108	12	MAPLE	ALIVE
3109	8	HICKORY	ALIVE
3110	32	OAK	ALIVE
3111	8	PINE	DEAD
3112	8	MAPLE	ALIVE
3113	24	OAK	ALIVE
3114	15	HICKORY	ALIVE
3115	12	MAPLE	ALIVE
3116	8	MAPLE	ALIVE
3117	32	OAK	ALIVE
3118	8	BEECH	ALIVE
3119	8	HICKORY	ALIVE
3120	8	BEECH	ALIVE
3121	8	BEECH	ALIVE
3122	8	BEECH	ALIVE
3123	8	HICKORY	ALIVE
3124	18	HICKORY	ALIVE
3125	24	OAK	ALIVE
3126	8	HICKORY	ALIVE
3127	12	HICKORY	ALIVE
3128	8	BEECH	ALIVE
3129	8	BEECH	ALIVE
3130	8	BEECH	ALIVE
3131	8	DEAD	ALIVE
3132	12	SPRUCE (TWIN)	DEAD
3133	12	MAPLE	ALIVE
3134	12	OAK	ALIVE
3135	12	MAPLE	ALIVE
3136	12	MAPLE	ALIVE
3137	12	MAPLE	ALIVE
3138	12	MAPLE	ALIVE
3139	8	MAPLE	ALIVE
3140	32	OAK	ALIVE
3141	8	DEAD	ALIVE
3142	12	BEECH	ALIVE
3143	15	OAK	ALIVE
3144	15	BEECH	ALIVE
3145	24	OAK	ALIVE
3146	15	OAK	ALIVE
3147	12	MAPLE	ALIVE
3148	8	MAPLE	ALIVE
3149	15	MAPLE (TWIN)	DEAD
3150	8	MAPLE	ALIVE
3151	8	MAPLE	ALIVE
3152	8	OAK	ALIVE
3153	15	HICKORY (TWIN)	ALIVE
3154	12	MAPLE	ALIVE
3155	12	MAPLE	ALIVE
3156	8	BEECH	ALIVE
3157	8	HICKORY	ALIVE
3158	8	HICKORY	ALIVE
3159	15	OAK	ALIVE
3160	8	BIRCH	ALIVE
3161	8	BIRCH	ALIVE
3162	12	PEAR	ALIVE
3163	8	PINE	ALIVE

TREE NO.	SIZE	SPECIES	CONDITION
3164	8	PINE	ALIVE
3165	8	PINE	ALIVE
3166	8	PINE	ALIVE
3167	8	PINE	ALIVE
3168	8	PINE	ALIVE
3169	8	MAPLE	ALIVE
3170	8	PINE	ALIVE
3171	12	MAPLE	ALIVE
3172	8	MAPLE	ALIVE
3173	8	BIRCH	ALIVE
3174	8	BIRCH	ALIVE
3175	8	BIRCH	ALIVE
3176	18	HICKORY	ALIVE
3177	12	OAK	ALIVE
3178	15	OAK	ALIVE
3179	10	BEECH	ALIVE
3180	12	BEECH	DISEASED
3181	15	BEECH	ALIVE
3182	12	BEECH	ALIVE
3183	10	HICKORY	ALIVE
3184	12	BEECH	ALIVE
3185	10	BEECH	ALIVE
3186	15	OAK	ALIVE
3187	15	BEECH	ALIVE
3188	12	BEECH	DISEASED
3189	15	BEECH	ALIVE
3190	15	BEECH	ALIVE
3289	8	OAK	ALIVE
3290	8	OAK	ALIVE
3291	8	OAK	ALIVE
3292	28	OAK	ALIVE
3293	15	LOCUST	ALIVE
3294	8	DOGWOOD	ALIVE
3295	24	MAPLE	ALIVE
3296	18	MAPLE	ALIVE
3297	21	OAK	DISEASED
3298	10	OAK	DEAD
3299	10	MAPLE	ALIVE
3300	12	OAK	ALIVE
3301	12	TULIP	ALIVE
3302	12	OAK	ALIVE
3303	12	BIRCH	ALIVE
3304	24	MAPLE	ALIVE
3305	18	OAK	ALIVE
3306	8	MAPLE	ALIVE
3307	12	MAPLE	ALIVE
3308	12	MAPLE (TWIN)	ALIVE
3309	18	MAPLE	ALIVE
3310	18	MAPLE	ALIVE
3311	21	ASH	ALIVE
3312	24	OAK	ALIVE
3313	15	MAPLE	ALIVE
3314	8	MAPLE	ALIVE
3315	15	MAPLE	ALIVE
3316	15	MAPLE	ALIVE
3317	10	MAPLE	ALIVE
3318	21	OAK	ALIVE
3319	24	OAK	ALIVE
3320	21	OAK	ALIVE
3321	28	OAK	ALIVE
3322	18	MAPLE	ALIVE
3323	12	MAPLE	ALIVE
3324	21	OAK	ALIVE
3325	18	OAK	ALIVE
3326	15	OAK	ALIVE
3327	12	MAPLE	ALIVE
3328	36	OAK	ALIVE
3329	36	OAK	ALIVE
3330	21	BIRCH	ALIVE
3331	15	BIRCH	ALIVE
3332	12	MAPLE	ALIVE
3333	12	HICKORY (TWIN)	ALIVE
3334	10	HICKORY	ALIVE
3335	15	OAK	ALIVE
3336	28	OAK	ALIVE
3337	21	OAK	ALIVE
3338	18	OAK	ALIVE
3339	18	OAK	ALIVE
3340	12	MAPLE	ALIVE
3341	15	OAK	ALIVE
3342	8	HICKORY	ALIVE
3343	15	OAK	ALIVE
3344	8	HICKORY	ALIVE
3345	15	OAK	ALIVE
3346	8	MAPLE	ALIVE
3347	24	PINE	ALIVE
3348	21	PINE	ALIVE
3349	40	OAK	ALIVE
3350	15	MAPLE	ALIVE
3351	21	OAK	ALIVE
3352	15	OAK	ALIVE
3353	15	MAPLE	ALIVE
3354	15	OAK	ALIVE
3355	15	MAPLE	ALIVE
3356	18	MAPLE	ALIVE
3357	15	MAPLE	ALIVE
3358	10	MAPLE	ALIVE
3359	12	HICKORY	ALIVE
3360	12	OAK	ALIVE
3361	12	MAPLE	ALIVE
3362	10	MAPLE	ALIVE
3363	12	HICKORY	DEAD
3364	21	MAPLE	ALIVE
3365	15	OAK	ALIVE
3366	15	CEDAR	ALIVE
3367	15	OAK	ALIVE
3368	12	OAK	ALIVE
3369	15	MAPLE	ALIVE
3370	12	MAPLE	ALIVE
3371	15	OAK	ALIVE
3372	15	MAPLE	ALIVE
3373	18	OAK	ALIVE
3374	15	OAK	ALIVE
3375	12	MAPLE	ALIVE
3376	18	OAK	ALIVE
3377	15	OAK	ALIVE
3378	15	CHERRY	ALIVE
3379	12	OAK	ALIVE
3380	12	OAK	DEAD
3381	10	HICKORY	DEAD
3382	15	OAK	ALIVE
3383	12	MAPLE	ALIVE
3384	15	CHERRY (TWIN)	ALIVE
3385	10	BEECH	ALIVE
3386	8	OAK	DEAD
3387	12	OAK	ALIVE
3388	8	OAK	ALIVE
3389	10	OAK	ALIVE
3390	15	OAK	ALIVE
3391	8	BEECH	ALIVE
3392	12	CHERRY	ALIVE
3393	8	OAK	ALIVE
3394	8	OAK	ALIVE
3395	10	MAPLE	ALIVE
3396	10	MAPLE	ALIVE
3397	15	OAK	ALIVE
3398	8	MAPLE	ALIVE
3399	15	OAK	ALIVE
3400	10	BEECG	ALIVE
3401	12	MAPLE	ALIVE
3402	18	OAK	ALIVE
3403	10	MAPLE	ALIVE
3404	10	MAPLE	ALIVE
3405	10	HICKORY	ALIVE
3406	18	OAK	ALIVE
3407	18	MAPLE	ALIVE
3408	8	OAK	ALIVE
3409	8	TREE OF HEAVEN	ALIVE
3410	12	SYCAMORE	ALIVE
3411	15	COTTONWOOD	ALIVE
3412	8	COTTONWOOD	ALIVE
3413	8	COTTONWOOD	ALIVE
3414	12	COTTONWOOD	ALIVE
3415	15	COTTONWOOD	ALIVE
3416	18	BIRCH	ALIVE
3417	8	BIRCH	ALIVE
3418	8	HICKORY	ALIVE
3419	8	HICKORY	ALIVE
3420	12	OAK	ALIVE
3421	12	HICKORY	ALIVE
3422	12	HICKORY	ALIVE
3423	12	HICKORY	ALIVE
3424	32	OAK (TWIN)	ALIVE
3425	8	MAPLE	ALIVE

TREE NO.	SIZE	SPECIES	CONDITION
3426	12	MAPLE	ALIVE
3427	32	OAK	ALIVE
3428	28	OAK	ALIVE
3429	8	MAPLE	ALIVE
3430	36	OAK	ALIVE
3431	10	MAPLE	ALIVE
3432	10	MAPLE	ALIVE
3433	32	OAK	ALIVE
3434	8	MAPLE	ALIVE
3435	8	MAPLE	ALIVE
3436	12	HICKORY (TWIN)	ALIVE
3437	12	BEECH	ALIVE
3438	32	OAK	ALIVE
3439	28	OAK	ALIVE
3440	8	BIRCH	ALIVE
3441	12	HICKORY	ALIVE
3442	18	OAK	ALIVE
3443	12	UNKNOWN	DEAD
3444	12	BEECH	ALIVE
3445	12	OAK	ALIVE
3446	12	BEECH	ALIVE
3447	15	BEECH	ALIVE
3448	28	OAK	ALIVE
3449	18	ASH	ALIVE
3450	12	MAPLE	ALIVE
3451	12	HICKORY	ALIVE
3452	8	MAPLE	ALIVE
3453	10	UNKNOWN	DEAD
3454	8	MAPLE	ALIVE
3455	12	TWIN	DEAD
3456	12	BEECH	DEAD
3457	8	BEECH	ALIVE
3458	10	UNKNOWN	DEAD
3459	12	MAPLE	ALIVE
3460	12	HICKORY	ALIVE
3461	15	HICKORY	ALIVE
3462	12	UNKNOWN	DEAD
3463	12	HICKORY	ALIVE
3464	12	HICKORY	ALIVE
3465	12	WALNUT	ALIVE
3466	8	HICKORY	ALIVE
3467	15	HICKORY	ALIVE
3468	15	HICKORY	ALIVE
3469	8	HICKORY	ALIVE
3470	32	HICKORY	ALIVE
3471	12	HICKORY	ALIVE
3472	12	BEECH	ALIVE
3473	8	HICKORY	ALIVE
3474	12	HICKORY	ALIVE
3475	8	MAPLE	ALIVE
3476	12	MAPLE	ALIVE
3477	15	HICKORY	ALIVE
3478	15	BIRCH	ALIVE
3479	15	HICKORY	ALIVE
3480	8	BEECH	ALIVE
3481	8	BEECH	ALIVE
3482	8	BEECH	ALIVE
3483	12	UNKNOWN	DEAD
3484	8	BEECH	ALIVE
3485	24	HICKORY	ALIVE
3486	12	SYCAMORE	ALIVE
3487	12	POLAR	ALIVE
3488	8	MAPLE	ALIVE
3489	8	TREE OF HEAVEN	ALIVE
3490	24	OAK (TWIN)	ALIVE
3491	24	OAK	ALIVE
3492	24	HICKORY	ALIVE
3493	10	HICKORY	ALIVE
3494	10	HICKORY	ALIVE
3495	12	HICKORY	ALIVE
3496	28	OAK	DISEASED
3497	8	UNKNOWN	DEAD
3498	12	MAPLE	ALIVE
3499	8	BEECH	ALIVE
3500	8	MAPLE	ALIVE
3501	8	MAPLE	ALIVE
3502	12	HICKORY	ALIVE
3503	12	MAPLE	ALIVE
3504	15	BEECH	ALIVE
3505	36	OAK	ALIVE
3506	15	TREE OF HEAVEN	ALIVE
3507	12	BEECH	ALIVE
3508	10	BEECH	ALIVE
3509	24	HICKORY	ALIVE
3510	8	MAPLE	ALIVE
3511	12	BEECH (TWIN)	ALIVE
3512	8	MAPLE	ALIVE
3513	12	MAPLE	ALIVE
3514	12	OAK	ALIVE
3515	12	MAPLE	ALIVE
3516	15	OAK	ALIVE
3517	8	MAPLE	ALIVE
3518	12	HICKORY	ALIVE
3519	15	OAK	ALIVE
3520	36	OAK (TWIN)	ALIVE
3521	15	OAK	ALIVE
3522	8	OAK	ALIVE
3523	15	OAK	ALIVE
3524	10	OAK	ALIVE
3525	8	HICKORY	ALIVE
3526	8	HICKORY	ALIVE
3527	8	HICKORY	ALIVE
3528	24	OAK	ALIVE
3529	10	MAPLE	ALIVE
3530	12	PINE	ALIVE
3531	10	WILLOW	ALIVE
3532	12	PINE	ALIVE
3533	12	OAK	ALIVE
3534	8	EASTER	ALIVE
3535	10	BEECH	ALIVE
3536	12	SPRUCE	ALIVE
3537	12	OAK	ALIVE
3538	8	OAK	ALIVE
3539	8	MAPLE	ALIVE
3540	12	OAK	ALIVE
3541	12	SPRUCE	ALIVE
3542	12	SPRUCE	ALIVE
3543	15	SPRUCE	ALIVE
3544	12	SPRUCE	ALIVE
3545	12	SPRUCE	ALIVE
3546	12	SPRUCE	ALIVE
3547	12	SPRUCE	ALIVE
3548	12	SPRUCE	ALIVE
3549	12	SPRUCE	ALIVE
3550	12	SPRUCE	ALIVE
3551	12	SPRUCE	ALIVE
3552	10	SPRUCE	ALIVE
3553	10	SPRUCE	ALIVE
3554	10	SPRUCE	ALIVE
3555	10	SPRUCE	ALIVE
3556	10	SPRUCE	ALIVE
3557	10	SPRUCE	ALIVE
3558	10	SPRUCE	ALIVE
3559	10	SPRUCE	ALIVE
3560	10	SPRUCE	ALIVE
3561	15	OAK	ALIVE
3562	15	OAK	ALIVE
3563	12	OAK	ALIVE
3564	15	OAK	ALIVE
3565	12	OAK	ALIVE
3566	10	OAK	ALIVE
3567	10	SPRUCE	ALIVE
3568	10	SPRUCE	ALIVE
3569	10	SPRUCE	ALIVE
3570	8	SPRUCE	ALIVE
3571	8	SPRUCE	ALIVE
3572	8	SPRUCE	ALIVE
3573	8	SPRUCE	ALIVE
3574	8	SPRUCE	ALIVE
3575	12	SPRUCE	ALIVE
3576	12	SPRUCE	ALIVE
3577	12	SPRUCE	ALIVE
3578	12	SPRUCE	ALIVE
3579	12	SPRUCE	ALIVE
3580	12	SPRUCE	ALIVE
3581	12	MAPLE	ALIVE
3582	12	OAK	ALIVE
3583	12	MAPLE	ALIVE
3584	10	HICKORY	ALIVE
3585	12	OAK	ALIVE
3586	12	BEECH	ALIVE
3587	15	OAK	ALIVE
3588	21	OAK	ALIVE
3589	18	HICKORY	ALIVE

TREE NO.	SIZE	SPECIES	CONDITION
3590	18	OAK	ALIVE
3591	8	BEECH	ALIVE
3592	8	HICKORY	ALIVE
3593	32	OAK	ALIVE
3594	10	HICKORY	ALIVE
3595	10	HICKORY	ALIVE
3596	12	HICKORY	ALIVE
3597	32	OAK	ALIVE
3598	15	HICKORY	ALIVE
3599	12	MAPLE	ALIVE
3600	12	MAPLE	ALIVE
3601	32	OAK	ALIVE
3602	8	BEECH	ALIVE
3603	10	HICKORY	ALIVE
3604	8	BEECH	ALIVE
3605	21	HICKORY	ALIVE
3606	15	OAK	ALIVE
3607	18	BEECH	ALIVE
3608	8	MAPLE	ALIVE
3609	12	OAK	ALIVE
3610	8	MAPLE	ALIVE
3611	18	OAK	ALIVE
3612	8	HICKORY	ALIVE
3613	24	OAK	ALIVE
3614	8	MAPLE	ALIVE
3615	24	OAK	ALIVE
3616	10	BIRCH	ALIVE
3617	24	OAK	ALIVE
3618	28	OAK	ALIVE
3619	32	OAK	ALIVE
3620	28	OAK	ALIVE
3621	28	OAK	ALIVE
3622	28	OAK	ALIVE
3623	18	HICKORY	ALIVE
3624	18	OAK	ALIVE
3625	12	HICKORY	ALIVE
3626	12	HICKORY	ALIVE
3627	8	HICKORY	ALIVE
3628	8	HICKORY	ALIVE
3629	8	HICKORY	ALIVE
3630	8	SPRUCE	ALIVE
3631	8	SPRUCE	ALIVE
3632	8	SPRUCE	ALIVE
3633	8	SPRUCE	ALIVE
3634	8	SPRUCE	ALIVE
3635	8	SPRUCE	ALIVE
3636	10	MAPLE	ALIVE
3637	8	MAPLE	ALIVE
3638	10	MAPLE	ALIVE
3639	10	MAPLE	ALIVE
3640	10	MAPLE	ALIVE
3641	10	MAPLE	ALIVE
3642	10	MAPLE	ALIVE
3643	10	MAPLE	ALIVE
3644	8	MAPLE	ALIVE
3645	8	MAPLE	ALIVE
3646	8	MAPLE	ALIVE
3647	8	MAPLE	ALIVE
3648	8	MAPLE	ALIVE
3649	8	MAPLE	ALIVE
3650	8	MAPLE	ALIVE
3651	8	PEAR	ALIVE
3652	8	PEAR	ALIVE
3653	10	MAPLE	ALIVE
3654	10	MAPLE	ALIVE
3655	10	MAPLE	ALIVE
3656	10	MAPLE	ALIVE
3657	10	MAPLE	ALIVE
3658	10	MAPLE	ALIVE
3659	10	MAPLE	ALIVE
3660	12	MAPLE	ALIVE
3661	12	MAPLE	ALIVE
3662	10	MAPLE	ALIVE
3663	12	MAPLE	ALIVE
3664	12	MAPLE	ALIVE
3665	12	MAPLE	ALIVE
3666	15	MAPLE	ALIVE
3667	10	MAPLE	ALIVE
3668	10	MAPLE	ALIVE
3669	24	OAK	ALIVE
3670	8	PEAR	ALIVE
3671	8	PEAR	ALIVE
3672	8	PEAR	ALIVE
3673	8	PEAR	ALIVE
3674	36	OAK	ALIVE
3675	10	PINE	ALIVE
3676	10	PINE	ALIVE
3677	12	MAPLE	ALIVE
3678	24	OAK	ALIVE
3679	8	BEECH	ALIVE
3680	15	HICKORY	ALIVE
3681	15	MAPLE	ALIVE
3682	15	OAK	ALIVE
3683	18	OAK	ALIVE
3684	18	MAPLE	ALIVE
3685	12	MAPLE	ALIVE
3686	12	MAPLE	ALIVE
3687	12	MAPLE	ALIVE
3688	8	MAPLE	ALIVE
3689	15	OAK	ALIVE
3690	15	BEECH	ALIVE
3691	15	BEECH	ALIVE
3692	8	MAPLE	ALIVE
3693	12	MAPLE	ALIVE
3694	8	MAPLE	ALIVE
3695	24	MAPLE (TWIN)	ALIVE
3696	28	OAK	ALIVE
3697	12	HICKORY	ALIVE
3698	36	OAK (TWIN)	ALIVE
3699	15	HICKORY	ALIVE
3700	15	HICKORY	DEAD
3701	15	OAK	ALIVE
3702	8	MAPLE	ALIVE
3703	10	HICKORY	ALIVE
3704	8	BEECH	ALIVE
3705	12	UNKNOWN	DEAD
3706	18	OAK	ALIVE
3707	8	MAPLE	ALIVE
3708	32	OAK	ALIVE
3709	12	BEECH	ALIVE
3710	28	OAK	ALIVE
3711	15	BEECH	ALIVE
3712	8	MAPLE	ALIVE
3713	10	BEECH	ALIVE
3714	15	BEECH	ALIVE
3715	10	MAPLE	ALIVE
3716	10	BEECH	ALIVE
3717	10	BEECH	ALIVE
3718	18	OAK	ALIVE
3719	10	BEECH	ALIVE
3720	10	HICKORY	ALIVE
3721	8	BEECH	ALIVE
3722	8	BEECH	ALIVE
3723	18	OAK	ALIVE
3724	18	OAK	ALIVE
3725	15	BIRCH	ALIVE
3726	18	BIRCH	ALIVE
3727	15	BIRCH	ALIVE
3728	15	BIRCH	ALIVE
3729	15	OAK	ALIVE
3730	12	BEECH	ALIVE
3731	12	BEECH	ALIVE
3732	12	BIRCH	ALIVE
3733	12	BIRCH	ALIVE
3734	12	OAK	ALIVE
3735	12	OAK	ALIVE
3736	15	BIRCH	ALIVE
3737	15	BIRCH	ALIVE
3738	8	OAK	ALIVE
3739	21	OAK	ALIVE
3740	18	OAK	ALIVE
3741	15	OAK	ALIVE
3742	21	BIRCH	ALIVE
3743	8	OAK	ALIVE
3744	12	OAK	ALIVE
3745	21	BIRCH	ALIVE
3746	18	OAK	ALIVE
3747	15	BEECH	ALIVE
3748	18	BIRCH	ALIVE
3749	12	BEECH	ALIVE
3750	10	BEECH	DEAD
3751	15	BEECH	ALIVE
3752	12	BEECH	ALIVE
3753	48	POPLAR (TWIN)	ALIVE

TREE NO.	SIZE	SPECIES	CONDITION
3754	24	HICKORY	ALIVE
3755	12	MAPLE	ALIVE
3756	8	MAPLE	ALIVE
3757	12	MAPLE	ALIVE
3758	8	MAPLE	ALIVE
3759	12	MAPLE	ALIVE
3760	12	BEECH	ALIVE
3761	8	MAPLE	ALIVE
3762	24	OAK	ALIVE
3763	18	OAK	ALIVE
3764	8	MAPLE	ALIVE
3765	10	BEECH	ALIVE
3766	8	BEECH	ALIVE
3767	8	MAPLE	ALIVE
3768	32	HICKORY	DISEASED
3769	15	BEECH	ALIVE
3770	15	BEECH	ALIVE
3771	12	BEECH	ALIVE
3772	15	BEECH	ALIVE
3773	15	BEECH	ALIVE
3774	8	MAPLE	ALIVE
3775	12	BEECH	ALIVE
3776	12	BEECH	ALIVE
3777	24	BEECH (TWIN)	ALIVE
3778	12	OAK	ALIVE
3779	18	OAK	ALIVE
3780	8	MAPLE	ALIVE
3781	10	BEECH	ALIVE
3782	12	BEECH	DISEASED
3783	21	OAK	ALIVE
3784	15	BEECH	ALIVE
3785	12	OAK	ALIVE
3786	10	BEECH	ALIVE
3787	21	OAK	ALIVE
3788	18	MAPLE	ALIVE
3789	12	UNKNOWN	DEAD
3790	15	MAPLE	ALIVE
3791	15	MAPLE	ALIVE
3792	12	BEECH	ALIVE
3793	12	BEECH	ALIVE
3794	10	UNKNOWN	DEAD
3795	12	BEECH	ALIVE
3796	12	BEECH	ALIVE
3797	21	HICKORY	ALIVE
3798	12	UNKNOWN	DEAD
3799	12	BEECH	ALIVE
3800	21	HICKORY	ALIVE
3801	8	BEECH	ALIVE
3802	15	HICKORY	ALIVE
3803	10	BEECH	ALIVE
3804	10	UNKNOWN	DEAD
3805	8	BEECH	ALIVE
3806	8	BEECH	ALIVE
3807	8	BEECH	ALIVE
3808	8	MAPLE	ALIVE
3809	12	HICKORY	ALIVE
3810	15	HICKORY	ALIVE
3811	12	BEECH	ALIVE
3812	12	BEECH	ALIVE
3813	18	HICKORY	ALIVE
3814	32	MAPLE (TWIN)	ALIVE
3815	12	BEECH	ALIVE
4061	15	BEECH	ALIVE
4062	12	BEECH	ALIVE
4063	12	BEECH	ALIVE
4064	24	OAK	ALIVE
4065	12	MAPLE	ALIVE
4066	18	OAK	ALIVE
4067	12	BEECH	ALIVE
4068	15	MAPLE	ALIVE
4069	10	BEECH	ALIVE
4070	12	BEECH	ALIVE
4071	21	OAK	ALIVE
4072	12	BIRCH	ALIVE
4073	10	BEECH	ALIVE
4074	12	MAPLE	ALIVE
4075	8	BEECH	ALIVE
4076	10	MAPLE	ALIVE
4077	10	BIRCH	ALIVE
4078	28	OAK	ALIVE
4079	12	BEECH	ALIVE
4080	18	OAK	ALIVE
4081	10	BEECH	ALIVE
4082	12	BEECH	ALIVE
4083	12	BEECH	ALIVE
4084	12	BEECH	ALIVE
4085	12	BEECH	ALIVE
4086	12	BEECH	ALIVE
4087	12	BEECH	ALIVE
4088	12	BEECH	ALIVE
4089	12	BEECH	ALIVE
4090	8	BEECH	ALIVE
4091	12	BEECH	ALIVE
4092	12	BEECH	ALIVE
4093	32	OAK	ALIVE
4094	24	OAK	ALIVE
4095	32	OAK	ALIVE
4096	21	OAK	ALIVE
4097	10	HICKORY	ALIVE
4098	15	HICKORY	ALIVE
4099	21	OAK	ALIVE
4100	15	OAK	ALIVE
4101	12	BEECH	ALIVE
4102	10	BEECH	ALIVE
4103	10	BEECH	ALIVE
4104	10	BEECH	ALIVE
4105	8	BEECH	ALIVE
4106	12	BEECH	ALIVE
4107	10	MAPLE	ALIVE
4108	24	HICKORY	ALIVE
4109	15	OAK	ALIVE
4110	8	BEECH	ALIVE
4111	10	BEECH	ALIVE
4112	15	BEECH	ALIVE
4113	12	BEECH	ALIVE
4114	12	BEECH	ALIVE
4115	15	HICKORY	ALIVE
4116	12	HICKORY	ALIVE
4117	10	HICKORY	ALIVE
4118	15	BEECHRY	ALIVE
4119	8	BEECH	ALIVE
4120	8	BEECH	ALIVE
4121	10	BEECH	ALIVE
4122	12	BEECH	ALIVE
4123	10	BEECH	ALIVE
4124	12	BEECH	ALIVE
4125	12	BEECH	ALIVE
4126	8	BEECH	DEAD
4127	15	BEECH	ALIVE
4128	12	BEECH	ALIVE
4129	10	BEECH	ALIVE
4130	10	BEECH	ALIVE
4131	12	BEECH	DEAD
4132	12	BEECH	DEAD
4133	15	BEECH	ALIVE
4134	8	BEECH	ALIVE
4135	12	BEECH	ALIVE
4136	8	BEECH	ALIVE
4137	15	BEECH	ALIVE
4138	12	BEECH	ALIVE
4139	8	BEECH	ALIVE
4140	8	BEECH	ALIVE
4141	8	OLD	ALIVE
4142	15	BEECH	ALIVE
4143	28	HICKORY	ALIVE
4144	12	BEECH	ALIVE
4145	12	BEECH	ALIVE
4146	8	MAPLE	ALIVE
4147	12	BEECH	ALIVE
4148	12	BEECH	ALIVE
4149	15	BIRCH	ALIVE
4150	15	BEECH	ALIVE
4151	15	BEECH	ALIVE
4152	40	OAK	ALIVE
4153	24	OAK	ALIVE
4154	12	BEECH	ALIVE
4155	12	BEECH	ALIVE
4156	12	BEECH	ALIVE
4157	12	MAPLE	ALIVE
4158	12	MAPLE	ALIVE
4159	15	BEECH	ALIVE
4160	15	BEECH	ALIVE
4161	12	BEECH	ALIVE
4162	12	BEECH	ALIVE

TREE NO.	SIZE	SPECIES	CONDITION
4163	12	BEECH	ALIVE
4164	12	HICKORY	ALIVE
4165	24	OAK	ALIVE
4166	12	MAPLE	ALIVE
4167	12	MAPLE	ALIVE
4168	12	MAPLE	ALIVE
4169	12	MAPLE	ALIVE
4170	12	SPRUCE	ALIVE
4171	12	SPRUCE	ALIVE
4172	12	SPRUCE	ALIVE
4173	12	MAPLE	ALIVE
4174	12	PINE	ALIVE
4175	12	PINE	ALIVE
4176	10	PINE	ALIVE
4177	12	PINE	ALIVE
4178	15	PINE	ALIVE
4179	21	OAK	ALIVE
4180	18	OAK	ALIVE
4181	18	OAK	ALIVE
4182	12	MAPLE	ALIVE
4183	18	OAK	ALIVE
4184	15	OAK	ALIVE
4185	10	BEECH	ALIVE
4186	8	HICKORY	ALIVE
4187	12	MAPLE	ALIVE
4188	15	HICKORY	ALIVE
4189	12	OAK	ALIVE
4190	12	MAPLE	ALIVE
4191	15	HICKORY	ALIVE
4192	12	MAPLE	ALIVE
4193	12	HICKORY	ALIVE
4194	12	MAPLE	ALIVE
4195	12	MAPLE	ALIVE
4196	28	BIRCH (TWIN)	ALIVE
4197	15	MAPLE	ALIVE
4198	40	MAPLE (TRIPLE)	ALIVE
4199	12	HICKORY	ALIVE
4200	18	HICKORY	ALIVE
4201	15	PINE	ALIVE
4202	21	HICKORY	ALIVE
4203	12	MAPLE	ALIVE
4204	10	OAK	ALIVE
4205	10	OAK	ALIVE
4206	10	BIRCH	ALIVE
4207	8	OAK	ALIVE
4208	8	OAK	ALIVE
4209	10	MAPLE	ALIVE
4210	18	HICKORY	ALIVE
4211	8	MAPLE	ALIVE
4212	15	MAPLE	ALIVE
4213	12	OAK	ALIVE
4214	27	OAK	ALIVE
4215	32	OAK	ALIVE
4216	12	SPRUCE	ALIVE
4217	12	SPRUCE	ALIVE
4218	12	SPRUCE	ALIVE
4219	18	OAK	ALIVE
4220	12	HICKORY	ALIVE
4221	12	MAPLE	ALIVE
4222	12	MAPLE	ALIVE
4223	32	POPLAR	ALIVE
4224	18	BEECH	ALIVE
4226	12	MAPLE	ALIVE
4227	28	POPLAR	ALIVE
4228	18	ASH	ALIVE
4229	18	ASH	ALIVE
4230	12	ASH	ALIVE
4231	28	MAPLE (TWIN)	ALIVE
4232	28	POPLAR	ALIVE
4233	18	BEECH	ALIVE
4234	8	BEECH	ALIVE
4235	18	BEECH	ALIVE
4236	15	OAK	ALIVE
4237	24	BEECH	ALIVE
4238	32	POPLAR	ALIVE
4239	18	BEECH	ALIVE
4240	12	BEECH	DEAD
4241	8	BEECH	DEAD
4242	8	BEECH	DEAD
4243	10	BEECH	ALIVE
4244	15	BEECH	ALIVE
4245	15	BEECH	ALIVE
4246	36	POPLAR	ALIVE
4247	15	MAPLE	ALIVE
4248	18	OAK	ALIVE
4249	28	POPLAR	ALIVE
4250	28	POPLAR	ALIVE
4251	24	OAK	ALIVE
4252	8	MAPLE	DEAD
4253	32	POPLAR	ALIVE
4254	8	MAPLE	DEAD
4255	24	POPLAR	ALIVE
4256	24	OAK	ALIVE
4257	18	OAK	ALIVE
4258	24	POPLAR	ALIVE
4259	15	BEECH	DISEASED
4260	12	BEECH	ALIVE
4261	8	MAPLE	DEAD
4262	28	POPLAR	ALIVE
4264	24	OAK	ALIVE
4265	28	POPLAR	ALIVE
4266	12	OAK	ALIVE
4267	15	HICKORY	ALIVE
4268	18	HICKORY	ALIVE
4269	18	HICKORY	ALIVE
4270	36	OAK (TWIN)	ALIVE
4271	12	HICKORY	ALIVE
4272	8	MAPLE	ALIVE
4273	12	MAPLE	ALIVE

ALIVE TREES TO BE REMOVED
DEAD OR DISEASED TREES TO BE REMOVED

0 20 40 80
SCALE: 1"=40'-0"

SAFE DIG
Before You Dig, Drill or Blast!
Call 811 before you dig
CALL US TOLL FREE 811 or 1-800-962-7962
NY Industrial Code Rule 753 requires no less than two working days notice, but not more than ten days notice.
www.digsafelynewyork.com

NOTE: UNAUTHORIZED ALTERATIONS OR ADDITIONS TO THIS DRAWING IS A VIOLATION OF SECTION 7209 (2) OF THE NEW YORK STATE EDUCATION LAW.

F:\2023\23-18 AMS - E MAIN STREET, YORKTOWN\ENGINEERING\CAD\C3D-23-18 AMS MAIN STREET YORKTOWN\23-18 AMS SITE PLAN.DWG 1/16/2017 3:19:52 PM

PROJECT # 23-18

Site Design Consultants
Civil Engineers • Land Planners
251-F Underhill Avenue, Yorktown Heights, NY 10598
(914) 962-4488 - Fax: (914) 962-7386
www.sitedesignconsultants.com

COPYRIGHT © 2025 BY SITE DESIGN CONSULTANTS, ALL RIGHTS RESERVED

Engineer:
STATE OF NEW YORK ★ JOSEPH CARLO RIINA ★ NO. 64431 LICENSED PROFESSIONAL ENGINEER
Joseph C. Riina, P.E.
NYS Lic. No. 64431

Revisions:
No. | Date | Comments:

Revisions:
No. | Date | Comments:

SCALE:
DRAWN BY: AKM
DATE: 06/18/25

TREE INVENTORY

SITE PLAN
PREPARED FOR
AMS YORKTOWN ACTIVE ADULT COMMUNITY
Town of Yorktown 800 EAST MAIN STREET Westchester County, NY

Sheet C-106

GENERAL NOTES:

1. THE ENGINEER WHOSE SEAL APPEARS HEREON HAS NOT BEEN RETAINED FOR SUPERVISION OF CONSTRUCTION, SUBSEQUENTLY,HE IS NOT RESPONSIBLE FOR CONSTRUCTION AND THEREFORE ASSUMES NO RESPONSIBILITY FOR CONSTRUCTION PRACTICES, PROCEDURES, AND RESULTS THEREFROM.
2. THE ENGINEER SHALL NOT BE HELD RESPONSIBLE OR HELD ACCOUNTABLE FOR THE INTEGRITY OF ANY STRUCTURES CONSTRUCTED OR UNDER CONSTRUCTION PRIOR TO THE APPROVAL OF THE PLANS.
3. THE TOWN ENGINEER'S OFFICE AND WATER DISTRICT OFFICE IS TO BE NOTIFIED 24 HOURS BEFORE COMMENCING SITE CONSTRUCTION OR WATER MAIN CONNECTION.
4. ALL WORK IS TO BE IN ACCORDANCE WITH THE TOWN CODE OF PRACTICE AND SPECIFICATIONS.
5. ALL CONDITIONS, LOCATIONS, AND DIMENSIONS SHALL BE FIELD VERIFIED AND THE ENGINEER SHALL BE IMMEDIATELY NOTIFIED OF ANY DISCREPANCIES.
6. ALL CHANGES MADE TO THE PLANS SHALL BE APPROVED BY THE ENGINEER WHOSE SEALAPPEARS ON THESE DRAWINGS. ANY SUCH CHANGES SHALL BE FILED AS AMENDMENTS TO THE ORIGINAL BUILDING PERMIT.
7. ALL WRITTEN DIMENSIONS ON THE DRAWINGS SHALL TAKE PRECEDENCE OVER ANY SCALED DIMENSIONS.
8. IT IS THE CONTRACTOR'S RESPONSIBILITY TO CALL IN A "CODE 53" PRIOR TO CONSTRUCTION FOR UNDERGROUND UTILITY LOCATIONS. 9. SUBSTRUCTURES AND THEIR ENCROACHMENTS BELOW GRADE, IF ANY, ARE NOT SHOWN.
9. ANY PROPOSED ELECTRIC AND/OR TELEPHONE SERVICE LINES ARE TO BE PLACED UNDERGROUND.
10. THE DESIGN ENGINEER DISCLAIMS ANY LIABILITY FOR DAMAGE OR LOSS INCURRED DURING OR AFTER CONSTRUCTION.
11. ALL CONDITIONS, LOCATIONS AND DIMENSIONS SHALL BE FIELD VERIFIED BY THE CONTRACTOR AND THE OWNER/ENGINEER NOTIFIED IN WRITING OF ANY DISCREPANCIES PRIOR TO THE START OF WORK. THE OWNER/ENGINEER WILL EVALUATE THE SITUATION AND MODIFY THE PLAN AS NECESSARY.
12. MAINTENANCE OF EASEMENTS ON SITE ARE THE RESPONSIBILITY OF THE GRANTOR.

CONTRACTOR RESPONSIBILITIES:

1. ALL WORK ON THE PROJECT SHALL BE PERFORMED IN A WORKMAN LIKE MANNER AND SHALL BE IN ACCORDANCE WITH THE STANDARDS OF THE INDUSTRY. THE OWNER WILL BE THE SOLE JUDGE OF THE ACCEPTABILITY OF THE WORK. MATERIALS AND WORK DEEMED UNACCEPTABLE WILL BE REMOVED AND REDONE AT THE SOLE COST AND RESPONSIBILITY OF THE CONTRACTOR.
2. THE CONTRACTOR SHALL BE RESPONSIBLE TO PROTECT HIS WORK AND WILL BE HELD RESPONSIBLE FOR CONSEQUENTIAL DAMAGES DUE TO HIS ACTIVITIES. THE CONTRACTOR SHALL BE RESPONSIBLE TO THE OWNER FOR THE ACTS AND OMISSIONS OF HIS EMPLOYEE, AND THEIR AGENTS AND EMPLOYEES, AND ANY OTHER PERSONS PERFORMING ANY THE WORK UNDER A SEPARATE CONTRACT WITH THE CONTRACTOR.
3. IT IS THE CONTRACTOR'S RESPONSIBILITY TO PROPERLY SHORE EXISTING UTILITIES IF REQUIRED BY CONSTRUCTION.
4. IT SHALL BE THE CONTRACTOR'S RESPONSIBILITY TO NOTIFY THE BUILDING INSPECTOR IN ADVANCE OF HIS WORK OR AS THE INSPECTOR DEEMS APPROPRIATE.
5. ALL CONDITIONS, LOCATIONS AND DIMENSIONS SHALL BE FIELD VERIFIED BY THE CONTRACTOR AND THE OWNER/ENGINEER NOTIFIED IN WRITING OF ANY DISCREPANCIES PRIOR TO THE START OF WORK. THE OWNER/ENGINEER WILL EVALUATE THE SITUATION AND MODIFY THE PLAN AS NECESSARY.
6. ALL CHANGES MADE TO THIS PLAN SHALL BE APPROVED BY THE ENGINEER WHOSE SEAL APPEARS ON THESE DRAWINGS. ANY UNAUTHORIZED ALTERATION OR ADDITIONS TO THIS DRAWING IS A VIOLATION OF SECTION 7209 (2) OF THE NEW YORK STATE EDUCATION LAW.
7. THE CONTRACTOR SHALL SUPERVISE AND DIRECT THE WORK USING HIS BEST SKILL AND ATTENTION. HE SHALL BE SOLELY RESPONSIBLE FOR ALL CONSTRUCTION MEANS, METHODS, TECHNIQUES, SEQUENCES, AND PROCEDURES AND FOR COORDINATING ALL PORTIONS OF THE WORK UNDER THIS CONTRACT.
8. THE CONTRACTOR SHALL BE RESPONSIBLE TO THE OWNER FOR THE ACTS AND OMISSIONS OF HIS EMPLOYEES, SUBCONTRACTORS, AND THEIR AGENTS AND EMPLOYEES, AND ANY OTHER PERSONS PERFORMING ANY OF THE WORK UNDER A CONTRACT WITH THE CONTRACTOR.
9. THE CONTRACTOR SHALL VERIFY ALL SUBSTRUCTURES ENCOUNTERED DURING CONSTRUCTION.
10. THE CONTRACTOR SHALL SECURE & PAY FOR A BUILDERS RISK POLICY TO COVER THE PERIOD OF CONSTRUCTION. THE ENGINEER & OWNER SHALL BE NAMED AS ADDITIONAL INSURED. ALL CONTRACTORS EMPLOYED AT THE SITE SHALL BE COVERED BY WORKMAN'S COMPENSATION.
11. THE CONTRACTOR SHALL PREPARE SPECIFIC MEASURES NECESSARY TO PREVENT AND CLEAN UP CHEMICAL AND PETROLEUM PRODUCT SPILLS THAT MAY OCCUR DURING ALL PHASES OF WORK ON THE PROJECT SITE.

GENERAL CONSTRUCTION NOTES:

1. BENCH MARKS USING U.S.G.S. DATUM SHALL BE OF SUCH ELEVATION THAT THE GROUND WILL SLOPE AWAY FROM IT IN ALL DIRECTIONS.
2. CONSTRUCTION ACTIVITY SHALL BE LIMITED FROM 8:00 A.M. TO 6 P.M., AND NO CONSTRUCTION ACTIVITY SHALL OCCUR ON SUNDAYS OR LEGAL NEW YORK STATE HOLIDAYS. WHERE BLASTING IS NECESSARY, IT SHALL OCCUR FROM MONDAY THROUGH FRIDAY BETWEEN THE HOURS OF 8:00 A.M. AND 6:00 P.M. NO BLASTING SHALL OCCUR ON HOLIDAYS, SATURDAY OR SUNDAY. ALL BLASTING SHALL ALSO BE COMPLETED IN ACCORDANCE WITH THE TOWN OF YORKTOWN AND NEW YORK STATE BLASTING ORDINANCES.
3. ANY SOIL THAT IS UNSUITABLE FOR DEVELOPMENT OF BUILDINGS OR ROADWAYS SHALL BE REMOVED FROM AREAS TO BE DEVELOPED AND SHALL BE DISPOSED OF WITHIN THE SITE IN NEW EMBANKMENTS WHERE STRUCTURAL LOADING, I.E. A BUILDING OR ROADWAY, WILL NOT TAKE PLACE. WHEN CONSTRUCTION IS PROPOSED TO OCCUR IN SPECIFIC AREAS WHERE SOILS ARE OF QUESTIONABLE SUITABILITY, THE APPLICANT SHALL PROVIDE SOILS ENGINEERING REPORTS AS REQUIRED BY THE PLANNING BOARD ENGINEER, PRIOR TO THE CONSTRUCTION OF ROADWAYS AND, AS REQUIRED BY THE BUILDING INSPECTOR, PRIOR TO THE ISSUANCE OF A BUILDING PERMIT.
4. NO TOPSOIL SHALL BE REMOVED FROM THE SITE.
5. ROCK CUT STABILITY IS TO BE FIELD VERIFIED BY GEOTECHNICAL ENGINEER AND SHALL BE MODIFIED IF REQUIRED.
6. NO CRUSHING/PROCESSING IS PERMITTED ON THE SITE WITHOUT PRIOR APPROVAL BY THE TOWN OF YORKTOWN PLANNING BOARD.

GENERAL STORM DRAINAGE & UTILITY NOTES

1. ALL UTILITIES, INCLUDING ELECTRIC LINES, TELEPHONE, WATER, SANITARY SEWER LINES, AND STORM SEWER LINES SHALL BE LOCATED UNDERGROUND AND SHALL BE INSTALLED IN ACCORDANCE WITH THE REQUIREMENTS OF THE TOWN OF YORKTOWN AND THE UTILITY COMPANIES HAVING JURISDICTION.
2. LOCATION OF GAS AND WATER VALVES, ELECTRIC AND TELEPHONE POLES ARE TO BE DETERMINED BY PROPER AUTHORITIES AND APPROVED, AS TO LOCATION, BY THE TOWN ENGINEER.
3. EACH BUILDING CONSTRUCTED HEREON SHALL BE OF SUCH AN ELEVATION THAT THE GROUND WILL SLOPE AWAY FROM IT IN ALL DIRECTIONS. IN THE EVENT THAT THIS IS NOT FEASIBLE, THE CONTRACTOR SHALL INSTALL TYPICAL YARD DRAINS AS REQUIRED AND CONNECT THEM TO THE STORM DRAINAGE SYSTEM OR AS DIRECTED BY THE PROJECT ENGINEER.
4. ROOF LEADERS AND FOOTING DRAINS SHALL EMPTY INTO THE STORM DRAINAGE SYSTEM OR DISCHARGE DIRECTLY TO STORMWATER MANAGEMENT SYSTEMS IF GRADES PERMIT, AND CONNECTION TO THE STORM SYSTEM IS NOT FEASIBLE, FOOTING DRAINS ONLY MAY DISCHARGE TO DAYLIGHT AT THE REAR OF BUILDINGS. FOOTING DRAINS SHALL EXTEND A MINIMUM OF 30 FT. FROM THE REAR FACE OF THE BUILDING WHEN POSSIBLE. UNDER NO CIRCUMSTANCES SHALL THE DISCHARGE OF GROUND WATER OR STORM WATER, EITHER BY GRAVITY OR BY PUMPING, BE DISCHARGED TO ANY SANITARY SEWER SYSTEM.
5. ANY REVISIONS AND/OR ADDITIONS TO THE ROAD STORM DRAINAGE SYSTEMS CURRENTLY SHOWN ON THE PLANS WHICH ARE DEEMED NECESSARY DURING CONSTRUCTION MUST BE MADE BY THE CONTRACTOR AS REQUIRED BY THE TOWN AND SHALL BE SHOWN ON THE AS-BUILT DRAWINGS.
6. STORM DRAIN PIPING TO BE HIGH DENSITY POLYETHYLENE AS SHOWN ON THE CONSTRUCTION DRAWINGS. MINIMUM COVER TO BE 2' UNLESS OTHERWISE NOTED.
7. INTERCEPTOR DRAINS ARE TO BE INSTALLED WHERE REQUIRED BY THE TOWN OR PROJECT ENGINEER DURING ROAD CONSTRUCTION.
8. ALL EXISTING UNDERGROUND DRAINS ENCOUNTERED DURING CONSTRUCTION OF PROPOSED ROADS ARE TO BE CONNECTED TO PROPOSED DRAINAGE IMPROVEMENTS. CONNECTIONS TO BE APPROVED BY THE TOWN ENGINEER.
9. PRIOR TO FINAL APPROVAL AND OPERATION OF DRAINAGE SYSTEM, CONTRACTOR SHALL CLEAR ALL ACCUMULATED SEDIMENT AND/OR DEBRIS FROM DRAINAGE STRUCTURES, MANHOLES, CULVERTS, OUTLETS AND DRAIN INLETS. ENGINEER SHALL BE NOTIFIED FOR FINAL INSPECTION.
10. ALL STRUCTURES SHALL BE SET ONE INCH BELOW PAVEMENT.
11. STREET OPENING PERMIT FROM THE TOWN OF YORKTOWN D.P.W. MAY BE REQUIRED FOR INSTALLATIONS IN PUBLIC ROADS.

WALL NOTES:

1. EXCAVATION IN GENERAL SHALL CONFORM TO THE LINES AND GRADES SHOWN ON THE CONTRACT DRAWINGS.
2. THE ENGINEER SHALL BE NOTIFIED OF UNSUITABLE SUB-GRADE SOILS PRIOR TO PLACEMENT OF WALL.
3. WALLS TO BE CONSTRUCTED ON VIRGIN IN-SITU SOIL SHALL HAVE A MINIMUM ALLOWABLE BEARING CAPACITY OF 2 TSF. ALL OTHER CONDITIONS SHALL BE APPROVED BY THE GEOTECHINICAL ENGINEER.
4. TO INSURE A PROPER BEARING SURFACE, THE WALL SHALL BE CONSTRUCTED ON NATURAL IN-SITU SOIL, THE CONTRACTOR SHALL STRIP ALL TOP SOIL. THE AREA SHALL THEN BE COMPACTED USING SUITABLE COMPACTION EQUIPMENT. A MINIMUM OF 3 PASSES SHALL BE MADE.
5. WALLS SHALL NOT BE CONSTRUCTED ON WET OR FROZEN GROUND.
6. SOILS USED AS BACKFILL SHALL CONSIST OF CLEAN DRY SOIL. THE MATERIAL SHALL BE GRANULAR AND FREE OF ORGANIC OR OTHER DELETERIOUS MATERIAL. IN GENERAL THE SOIL SHALL BE NON-PLASTIC WITH A PLASTICITY INDEX LESS THAN 5 AND SHALL CONFORM TO THE AASHTO SOIL CLASSIFICATION SYSTEM FOR AN "A-1-A" SOIL . HOWEVER THE MAXIMUM SIZE SHALL BE 6". IN GENERAL ALL FILL SHALL BE APPROVED BY THE ENGINEER PRIOR TO IT'S USE. WET MATERIAL OR UNSUITABLE MATERIAL SHOULD NOT BE USED.
7. BACKFILL SHALL BE PLACED AND COMPACTED IN A MAXIMUM 12" LIFTS.
8. ALL BOULDER RETAINING WALLS SHALL HAVE A GEOTEXTILE FABRIC BACKING FOR THE FULL HIEGHT OF THE WALL AS MANUFACTURED BY MIRAFI OR APPROVED EQUAL.
9. IF GROUNDWATER IS ENCOUNTERED, THE ENGINEER SHALL BE NOTIFIED IMMEDIATELY TO DETERMINE IF THE ADDITION OF AN UNDERDRAIN MAY BE REQUIRED.
10. THE CONTRACTOR SHALL NOT USE LARGE OR HEAVY CONSTRICTION EQUIPMENT WITHIN 5' OF THE RETAINING WALLS OR NEW FOUNDATION WALLS. HAND OPERATED COMPACTING EQUIPMENT SHALL BE USED WITHIN 5' OF THE WALL FACE.
11. ALTERNATE WALL DESIGNS MUST BE SEALED BY A NEW YORK STATE LICENSED PROFESSIONAL ENGINEER THE MINIMUM FACTORS OF SAFETY FOR SLIDING AND OVERTURNING SHALL BE 2.0.
12. ALTERNATE WALL DESIGNS MUST BE SEALED BY A NEW YORK STATE LICENSED PROFESSIONAL ENGINEER THE MINIMUM FACTORS OF SAFETY FOR SLIDING AND OVERTURNING SHALL BE 2.0.

WATERMAIN NOTES

I. DISTRIBUTION SYSTEM - WATERMAIN

A. GENERAL

THE CONTRACTOR SHALL PERFORM THE NECESSARY EXCAVATION, BACKFILLING, CLEARING, GRUBBING, SHEETING, SHORING, DO ALL SHAPING OF TRENCHES, PUMPING AND BAILING, LAYING AND JOINING OF ALL PIPES, PROTECT AND SUPPORT EXISTING STRUCTURES AND REPAIR THEM, IF DAMAGED, AND ALL ELSE NECESSARY TO COMPLETE THE WORK.

THE CONTRACTOR SHALL FURNISH ALL MATERIALS, EQUIPMENT, LABOR, AND TOOLS NECESSARY TO COMPLETE THE WORK IN A SAFE, NEAT, AND WORKMANLIKE MANNER.

B. SITE AND ACCESS CLEARING (WITHIN EASEMENTS)

THE CONTRACTOR SHALL CONFINE ALL CLEARING OPERATIONS TO WITHIN THE IMMEDIATE AREAS THAT ARE ESSENTIAL FOR CONSTRUCTION OF THE WORK.

C. STOCKPILING OF SUITABLE BACKFILL MATERIAL

THE CONTRACTOR SHALL BE PREPARED WHEN EXCAVATING THE TRENCH TO SEPARATE SUITABLE BACKFILL MATERIAL FROM UNSUITABLE MATERIAL FOR USE AS BACKFILL ADJACENT TO THE PIPE.

D. PROTECTION OF EXISTING STRUCTURES AND UTILITIES

SPECIAL PRECAUTIONS SHALL BE TAKEN BY THE CONTRACTOR TO PROTECT OVERHEAD POWER LINES, WATERMAINS, GAS MAINS, ELECTRIC AND TELEPHONE CONDUITS, STORM AND SANITARY SEWERS, CULVERTS, BUILDINGS AND OTHER EXISTING STRUCTURES IN AND NEAR THE EXCAVATION. IN ALL CASES, WHETHER UNDERGROUND STRUCTURES HAVE OR HAVE NOT BEEN DELINEATED, THE TOWN ENGINEER, WATER SUPERINTENDENT, OR AUTHORIZED REPRESENTATIVE ACCEPTS NO RESPONSIBILITY FOR THEIR LOCATION. 'UNDERGROUND UTILITIES" LOCATES EXISTING UNDERGROUND UTILITIES FREE OF CHARGE. THE PHONE NUMBER IS 1-800-245-2828.

GUTTERS, SEWERS, DRAINS AND DITCHES SHALL BE KEPT OPEN AT ALL TIMES FOR SURFACE DRAINAGE. NO DAMMING OR PONDING OF WATER IN GUTTERS OR OTHER WATERWAYS WILL BE PERMITTED EXCEPT WHERE STREAM CROSSINGS ARE NECESSARY AND THEN ONLY TO AN EXTENT WHICH THE TOWN ENGINEER, WATER SUPERINTENDENT, OR AUTHORIZED REPRESENTATIVE SHALL CONSIDER NECESSARY. THE CONTRACTOR SHALL NOT DIRECT ANY FLOW OF WATER ACROSS OR OVER PAVEMENTS EXCEPT THROUGH APPROVED PIPES OR PROPERLY CONSTRUCTED TROUGHS OF SUCH SIZES AND LENGTHS AS MAY BE REQUIRED, AND PLACE THE SAME AS DIRECTED. THE GRADING IN THE VICINITY OF TRENCHES SHALL BE CONTROLLED SO THAT THE GROUND SURFACE IS PROPERLY PITCHED TO PREVENT WATER RUNNING IN THE TRENCHING. THE CONTRACTOR SHALL NOT COMMENCE OPERATIONS INVOLVING ANY PUBLIC UTILITY BEFORE HAVING GIVEN WRITTEN NOTICE TO THE COMPANY OR OWNER, OR ITS AGENTS, AND SHALL COOPERATE WITH THE COMPANY'S OR OWNER'S FORCES IN PROTECTING AND PREVENTING DAMAGE TO THE PROPERTY.

THE CONTRACTOR WILL, AT HIS OWN EXPENSE, BE RESPONSIBLE FOR DIRECT OR INDIRECT DAMAGE THAT MAY BE DONE TO ANY UTILITY OR STRUCTURE IN THE PROSECUTION OF HIS WORK. THE LIABILITY OF THE CONTRACTOR IS ABSOLUTE AND IS NOT DEPENDENT UPON ANY QUESTIONS OF NEGLIGENCE ON HIS PART OR ON THE PART OF HIS AGENT, OR EMPLOYEES, AND THE NEGLECT OF THE TOWN ENGINEER, WATER SUPERINTENDENT, OR AUTHORIZED REPRESENTATIVE TO DIRECT THE CONTRACTOR TO TAKE ANY PARTICULAR PRECAUTION OR TO REFRAIN FROM DOING SUCH DAMAGE.

SHOULD THE POSITION OF ANY PIPE, CONDUIT, POLE OR OTHER STRUCTURES, ABOVE OR BELOW THE GROUND, BE SUCH AS TO REQUIRE ITS REMOVAL, REALIGNMENT, OR CHANGE DUE TO WORK TO BE DONE, REALIGNMENT OR CHANGE WILL BE DONE BY OR UNDER SUPERVISION OF THE OWNER OF THE OBSTRUCTIONS. THE CONTRACTOR SHALL UNCOVER AND SUSTAIN THE STRUCTURES, AFTER SUCH REALIGNMENT OR CHANGE.

THE CONTRACTOR SHALL NOT INTERFERE WITH ANY PERSONS, OR WITH THE OWNER IN PROTECTING, REMOVING, CHANGING OR REPLACING THEIR PIPES, CONDUITS, POLES OR OTHER STRUCTURES; BUT HE SHALL SUFFER SAID PERSONS OR THE OWNER TO TAKE ALL SUCH MEASURES AS THEY MAY DEEM NECESSARY OR ADVISABLE FOR THE PURPOSE AFORESAID, AND THE CONTRACTOR SHALL THEREBY BE IN NO WAY RELIEVED OF ANY OF HIS RESPONSIBILITIES.

THE CONTRACTOR SHALL MAKE ALL NECESSARY ARRANGEMENTS WITH THE OWNER OF THE RESPECTIVE UTILITY PRIOR TO RELOCATION OR INTERRUPTION OF SERVICE. ALL WORK NECESSARY FOR THE RELOCATION SHALL BE PERFORMED BY THE CONTRACTOR, OR BY THE OWNER AT THE OWNER'S OPTION, AND TO THE SATISFACTION OF THE OWNER. WHERE SERVICE IS INTERRUPTED, THE CONTRACTOR SHALL COOPERATE IN RESTORING SERVICE PROMPTLY. ALL CHARGES FOR DAMAGES DONE TO UTILITIES SHALL BE PAID BY THE CONTRACTOR.

E. CONSTRUCTION OF ROAD RIGHT-OF-WAY

CONSTRUCTION IN THE ROAD RIGHT-OF-WAY SHALL AT ALL TIMES BE PERFORMED WITH MINIMUM DISTURBANCE TO TRAFFIC WITH SUFFICIENT BARRICADES AND DIRECTION. DETOURS CAN BE INSTITUTED WITH APPROVAL OF THE TOWN ENGINEER, WATER SUPERINTENDENT, OR AUTHORIZED REPRESENTATIVE, OR STATE, COUNTY, OR LOCAL AUTHORITIES. PAVEMENT SHALL BE CUT PRIOR TO REMOVAL. HOLES AND SETTLEMENTS IN THE TRENCHES SHALL BE IMMEDIATELY FILLED TO THE ORIGINAL GRADE ELEVATION WITH THE SPECIFIED MATERIALS.

F. EXCAVATION AND PREPARATION OF TRENCH

THE CONTRACTOR SHALL PROCEED WITH CAUTION IN THE EXCAVATION AND PREPARATION OF THE TRENCH SO THAT THE EXACT LOCATION OF UNDERGROUND STRUCTURES, BOTH KNOWN AND UNKNOWN, MAY BE DETERMINED. THE TRENCH SHALL BE EXCAVATED SO THAT THE PIPE CAN BE LAID TO THE ALIGNMENT AND DEPTH REQUIRED. MINIMUM DEPTH OF COVER FROM SURFACE OF GROUND TO TOP OF PIPE BARREL SHALL BE FOUR FEET (4'). NO TRENCH SHALL BE EXCAVATED MORE THAN FIVE HUNDRED LINEAL FEET (500 LF) IN ADVANCE OF PIPE LAYING UNLESS AUTHORIZED BY THE TOWN ENGINEER, WATER SUPERINTENDENT, OR AUTHORIZED REPRESENTATIVE. THE TRENCH SHALL BE SO BRACED AND DRAINED THAT THE WORKMEN MAY WORK THEREIN SAFELY AND EFFICIENTLY. IT IS ESSENTIAL THAT THE DISCHARGE OF THE TRENCH DEWATERING PUMPS BE CONDUCTED TO NATURAL DRAINAGE CHANNELS OR DRAINS, AS IN ACCORDANCE WITH OSHA REQUIREMENTS.

THE WIDTH OF THE TRENCH SHALL BE OF ADEQUATE SIZE TO PERMIT THE PIPE TO BE LAID AND JOINTED PROPERLY, BUT SHALL NOT EXCEED THE SUM OF TWENTY-FOUR INCHES(24") PLUS THE PIPE OUTSIDE DIAMETER, AND THE BACKFILL TO BE PLACED AND COMPACTED AS SPECIFIED.

LEDGE ROCK, BOULDERS AND LARGE STONES SHALL BE REMOVED TO PROVIDE A CLEARANCE OF AT LEAST SIX INCHES (6") BELOW AND ON EACH SIDE OF ALL PIPES AND FITTINGS.

THE TRENCH SHALL BE EXCAVATED TO THE DEPTH REQUIRED SO AS TO PROVIDE A UNIFORM AND CONTINUOUS BEARING AND SUPPORT FOR THE PIPE ON SOLID AND UNDISTURBED GROUND AT EVERY POINT. WHERE THE BOTTOM OF THE TRENCH AT A SUBGRADE IS FOUND TO BE UNSTABLE, OR TO INCLUDE ASHES, CINDERS, ALL TYPES OF REFUSE, VEGETABLE OR OTHER ORGANIC MATERIAL OR LARGE PICES OF FRAGMENTS OR INORGANIC MATERIAL WHICH IN THE JUDGEMENT OF THE TOWN ENGINEER, WATER SUPERINTENDENT, OR AUTHORIZED REPRESENTATIVE SHOULD BE REMOVED, THE CONTRACTOR SHALL EXCAVATE AND REMOVE SUCH UNSUITABLE MATERIAL TO THE WIDTH AND DEPTH ORDERED BY THE TOWN ENGINEER, WATER SUPERINTENDENT, OR AUTHORIZED REPRESENTATIVE.

ANY PART OF THE BOTTOM OF THE TRENCH EXCAVATED BELOW THE SPECIFIED GRADE SHALL BE CORRECTED WITH APPROVED BEDDING MATERIAL, SUCH AS THOROUGHLY COMPACTED CRUSHED STONE, GRAVEL, OR CONCRETE AS DIRECTED BY THE TOWN ENGINEER, WATER SUPERINTENDENT, OR AUTHORIZED REPRESENTATIVE. THE FINISHED SUBGRADE SHALL BE PREPARED ACCURATELY BY MEANS OF HAND TOOLS.

GENERAL WATER MAIN NOTES:

1. ALL PROPOSED WATERMAIN MATERIALS, CONSTRUCTION AND INSTALLATION SHALL CONFORM TO ALL APPLICABLE RULES AND REGULATIONS OF THE TOWN OF YORKTOWN WATER DEPARTMENT AND THE WESTCHESTER COUNTY HEALTH DEPARTMENT STANDARDS AND SPECIFICATIONS. CONSTRUCTION MUST BE UNDER THE SUPERVISION OF A LICENSED AND REGISTERED PROFESSIONAL ENGINEER IN THE STATE OF NEW YORK WHO SHALL FURNISH A CERTIFICATE OF CONSTRUCTION COMPLIANCE AND TWO (2) SETS OF AS-BUILT PLANS AFTER THE COMPLETION OF THE PROJECT.
2. THE RECORDS OF THE TOWN OF YORKTOWN INDICATE THAT THERE IS ADEQUATE WATER PRESSURE AND CAPACITY AS REQURIED TO SERVE THIS PROJECT.
3. ALL BACKFLOW PREVENTION DEVICES ASSOCIATED WITH THE FIRE AND DOMESTIC SERVICES FOR EACH OF THE PROPOSED OFFICE SPACES IN THE TYPE "B" UNITS SHALL BE LOCATED INTERNAL TO THE BUILDING AND SHALL REQUIRE SEPARATE APPROVAL BY THE WESTCHESTER COUNTY DEPARTMENT OF HEALTH.
4. ALL FIRE AND DOMESTIC SERVICE CONNECTIONS FROM THE PROPOSED WATER MAIN SHALL BE INSTALLED WITH WET TAPS AFTER THE CONTRACTOR HAS INSTALLED THE MAIN AND IT HAS BEEN APPROVED BY THE TOWN OF YORKTOWN WATER DEPARTMENT AND THE WESTCHESTER COUNTY DEPARTMENT OF HEALTH.
5. THE CONTRACTOR IS ADVISED THAT BEFORE HE CONNECTS TO THE EXISTING WATER SYSTEM, HE MUST ADVISE AND COORDINATE HIS OPERATIONS WITH THE TOWN OF YORKTOWN WATER DEPARTMENT'S SUPERINTENDENT. MEANS AND METHODS USED TO CONNECT TO THE EXISTING SERVICE SHALL BE APPROVED BY THE TOWN AND SHALL INCLUDE BUT NOT BE LIMITED TO WET TAPS OR OTHERWISE.
6. THE CONTRACTOR IS TO MAINTAIN CONSTANT FLOW AND PRESSURE IN ALL WATER MAINS AT ALL TIMES. IF THE NEED SHOULD ARISE THAT WATER SERVICE IS TO BE INTERRUPTED FOR A SHORT PERIOD, IT MUST BE COORDINATED WITH AND APPROVED BY THE ENGINEER AND THE TOWN OF YORKTOWN SUPERINTENDENT OF WATER.
7. WATER MAINS CROSSING HOUSE SEWERS, STORM SEWERS OR SANITARY SEWERS SHALL BE LAID TO PROVIDE A VERTICAL SEPARATION OF A MINIMUM OF 18" BETWEEN THE BOTTOM OF WATER MAIN AND TOP OF SEWER.
8. WATER MAINS PASSING UNDER HOUSE SEWERS, IN ADDITION, SHALL BE PROTECTED BY PROVIDING A VERTICAL SEPARATION OF 18" MINIMUM FROM THE BOTTOM OF THE SEWER TO THE TOP OF THE WATER MAIN AND ADEQUATE STRUCTURAL SUPPORT FOR THE SEWER TO PREVENT EXCESSIVE DEFLECTION OF THE JOINTS AND THE SEWER SETTLING AND BREAKING THE WATER MAIN. IN ADDITION THE LENGTH OF WATER PIPE IS TO BE CENTERED AT THE POINT OF CROSSING SO THAT THE JOINTS WILL BE EQUIDISTANT AND AS FAR AS POSSIBLE FROM THE SEWER. NO WATER MAIN SHALL PASS THROUGH OR COME IN CONTACT WITH ANY PART OF A SEWER OR SEWER MANHOLE.
9. THE COVER OVER THE TOP OF THE WATER MAIN SHALL BE A MINIMUM OF 4 FEET TO A MAXIMUM OF 5.5 FT.
10. WATER MAINS SHALL BE CLASS 52 DUCTILE IRON PIPES (DIP) TYTON JOINT TYPE AND FITTINGS SHALL BE FACTORY CEMENT LINED CLASS 52. ALL FITTINGS SHALL HAVE MECHANICAL JOINTS AND SHALL BE PRESSURE RATED AT 250 PSI. ALL NECESSARY JOINT MATERIALS SHALL BE FURNISHED. WATER MAINS SHALL BE INSTALLED IN ACCORDANCE WITH AWWA STANDARDS, LATEST REVISION.
11. ALL GATE VALVES SHALL BE MUELLER RESILIENT WEDGE (TURN LEFT OPEN) TYPE AND SHALL MEET AWWA STANDARDS, LATEST REVISION.
12. ALL SERVICE CONNECTIONS AND SMALL DIAMETER EXTENSIONS SHALL CONFORM TO AWWA C-151.
13. RETAINER GLANDS AND CONCRETE THRUST BLOCKS OR RODS SHALL BE USED AT ALL LOCATIONS WHERE RESTRAINTS EXIST.
14. INSTALLATION AND TESTING OF THE WATER MAIN SHALL BE INSPECTED BY THE WESTCHESTER COUNTY DEPARTMENT OF HEALTH. THE CONTRACTOR SHALL PROVIDE THE HEALTH DEPARTMENT A MINIMUM 48 HOURS NOTICE PRIOR TO ANY PRESSURE/LEAKAGE TESTS AND/OR DISINFECTION AND BACTERIOLOGICAL TESTS PERFORMED ON THE PROPOSED WATER MAIN. THE RESULTS OF THE ABOVE TESTS MUST BE ACCEPTED BY THE WCHD PRIOR TO USE OF THE MAIN.
15. ASBUILT DRAWINGS SHALL SHOW DIMENSIONS BETWEEN ALL VALVE TURNING NUTS AND FINISH GRADE.
16. INSTALLATION, DISINFECTION AND TESTING TO BE WITNESSED AND CERTIFIED BY A LICENSED PROFESSIONAL ENGINEER OR TOWN OF YORKTOWN ENGINEER.
17. ALL HYDRANTS AND VALVES SHALL BE AS MANUFACTURED BY THE MUELLER COMPANY.
18. THE FINAL LOCATIONS OF FIRE HYDRANTS AND SIAMESE CONNECTIONS SHALL BE DETERMINED BY AND COORDINATED WITH THE TOWN OF YORKTOWN FIRE DEPARTMENT.
19. IF, DURING CONSTRUCTION, IT IS FOUND THAT THE REQUIRED SEPARATION OF WATER MAINS, SANITARY SEWERS, STORM SEWERS, AND BUILDING SEWERS CANNOT BE MET, THE DEVELOPER OR HIS AUTHORIZED REPRESENTATIVE SHALL CONTACT THE WESTCHESTER COUNTY DEPARTMENT OF HEALTH. APPROVAL BY THE WCHD IS REQUIRED PRIOR TO ANY FIELD CHANGES THAT WILL AFFECT MINIMUM WATER/SEWER SEPARATION DISTANCES.
20. ALL TYPES OF INSTALLED PIPE SHALL BE PRESSURE TESTED AND LEAKAGE TESTED IN ACCORDANCE WITH THE LATEST EDITION OF AWWA STANDARD C-600.
21. ALL NEW, CLEANED OR REPAIRED WATER MAINS SHALL BE DISINFECTED AND BACTERIOLOGICAL TESTING PERFORMED IN ACCORDANCE WITH THE LATEST EDITION OF AWWA STANDARD C-651-05 (EXCEPT FOR SECTION 4.4.2 WHICH IS NOT APPROVABLE). THE SPECIFICATIONS INCLUDE DETAILED PROCEDURES FOR THE ADEQUATE FLUSHING, DISINFECTION, AND MICRO- BIOLOGICAL TESTING OF ALL WATER MAINS.
22. ROAD OPENINGS SHALL BE DONE IN ACCORDANCE WITH CONDITIONS OF PERMIT, AND COORDINATED WITH THE TOWN OF YORKTOWN.
23. UPON COMPLETION AND PRIOR TO USE, TWO (2) SETS OF AS-BUILT PLANS AND ACCEPTABLE BACTERIOLOGICAL SAMPLE AND WATER MAIN HYDROSTATIC TEST RESULTS MUST BE SUBMITTED ALONG WITH THE DESIGN PROFESSIONAL'S CERTIFICATION OF CONSTRUCTION TO THE WESTCHESTER COUNTY DEPARTMENT OF HEALTH.

SANITARY SEWER TESTING

PROCEDURE AND METHOD OF TESTING - THE TEST LENGTH INTERVALS AND TYPE OF LEAKAGE TEST SHALL BE APPROVED BY THE OWNER'S FIELD REPRESENTATIVE AND SITE ENGINEER. IN THE CASE OF SEWERS LAID ON STEEP GRADES, THE LENGTH OF LINE TO BE TESTED BY EXFILTRATION AT ANY ONE TIME MAY BE LIMITED BY THE MAXIMUM ALLOWABLE INTERNAL PRESSURE ON THE PIPE AND JOINTS AT THE LOWER END OF THE LINE. THE WCHD SHALL BE NOTIFIED 48 HRS IN ADVANCE SO THEY MAY WITHNESS THE TESTING DEPENDING ON FIELD CONDITIONS AND/OR DESIRE OF THE CONTRACTOR, THE FOLLOWING TESTS FOR LEAKAGE MAY BE EMPLOYED:

1. HYDROSTATIC TEST
THE TEST PERIOD, WHEREIN THE MEASUREMENTS ARE TAKEN SHALL NOT BE LESS THAN FOUR (4) HOURS IN EITHER TYPE OF TEST. THE TOTAL LEAKAGE OF ANY SECTION TESTED SHALL NOT EXCEED THE RATE OF 100 GALLONS PER MILE OF PIPE PER 24 HOURS PER INCH OF NOMINAL PIPE DIAMETER. FOR PURPOSES OF DETERMINING THE MAXIMUM ALLOWABLE LEAKAGE, MANHOLES SHALL BE CONSIDERED AS SECTIONS OF PIPE AND SHALL BE TESTED AT A LEVEL ABOVE THE HIGHEST JOINT PRIOR TO THE CONCRETE/RIM CONNECTION.

(I) INFILTRATION TEST -
THIS TEST MAY BE USED ONLY WHEN GROUND WATER LEVELS ARE AT LEAST TWO (2) FEET ABOVE THE TOP OF THE PIPE FOR THE ENTIRE LENGTH OF THE SECTION TO BE TESTED DURING THE ENTIRE PERIOD OF THE TEST. GROUND WATER LEVELS MAY BE MEASURED IN AN OPEN TRENCH OR IN STANDPIPES PREVIOUSLY PLACED IN BACKFILLED TRENCHES DURING THE BACKFILLING OPERATIONS. WHEN STANDPIPES ARE INSTALLED IN THE BACKFILL FOR GROUND WATER MEASUREMENT, THE LOWER ENDS OF THESE SHALL BE SATISFACTORILY EMBEDDED IN A MASS OF CRUSHED STONE OR GRAVEL TO MAINTAIN FREE PERCOLATION AND DRAINAGE. INFILTRATION THROUGH JOINTS SHALL BE MEASURED BY USING A WATERTIGHT WEIR OR ANY OTHER APPROVED DEVICE FOR VOLUMETRIC MEASUREMENT INSTALLED AT THE LOWER END OF THE SECTION UNDER TEST.

(II) EXFILTRATION TEST -
THIS TEST CONSISTS OF FILLING THE PIPE WITH WATER TO PROVIDE A HEAD OF AT LEAST TWO (2) FEET ABOVE THE TOP OF THE PIPE OR TWO (2) FEET ABOVE GROUND WATER, WHICHEVER IS HIGHER, AT THE HIGHEST POINT OF THE PIPE LINE UNDER TEST, AND THEN MEASURING THE LOSS OF WATER FROM THE LINE BY THE AMOUNT WHICH MUST BE ADDED TO MAINTAIN THE ORIGINAL LEVEL. IN THIS TEST THE LINE MUST REMAIN FILLED WITH WATER FOR AT LEAST TWENTY-FOUR (24) HOURS PRIOR TO THE TAKING OF MEASUREMENTS. EXFILTRATION SHALL BE MEASURED BY THE DROP OF WATER LEVEL IN A CLOSED-END STANDPIPE OR IN ONE OF THE SEWER MANHOLES AVAILABLE FOR CONVENIENT MEASURING.

WHEN A STANDPIPE AND PLUG ARRANGEMENT IS USED IN THE UPPER MANHOLE OF A LINE UNDER TEST, THERE MUST BE SOME POSITIVE METHOD OF RELEASING ENTRAPPED AIR IN THE SEWER PRIOR TO TAKING MEASUREMENTS.

2. VACUUM TESTING OF MANHOLES - TESTED AS PER ASTM STANDARD - C-1244
THIS TEST METHOD IS ONLY APPLICABLE TO PRECAST CONCRETE MANHOLES. ALL LIFTING HOLES AND EXTERIOR JOINTS SHALL BE FILLED AND POINTED WITH AN APPROVED NON-SHRINKING MORTAR. NO STANDING WATER SHALL BE ALLOWED IN THE MANHOLE EXCAVATION WHICH MAY AFFECT THE ACCURACY OF THE TEST. ALL PIPES AND OTHER OPENINGS INTO THE MANHOLE SHALL BE SUITABLY PLUGGED IN SUCH A MANNER AS TO PREVENT DISPLACEMENT OF THE PLUGS WHILE THE VACUUM IS DRAWN. INSTALLATION AND OPERATION OF THE VACUUM EQUIPMENT AND INDICATING DEVICES SHALL BE IN ACCORDANCE WITH EQUIPMENT SPECIFICATIONS AND INSTRUCTIONS PROVIDED BY THE MANUFACTURER.
THE TEST HEAD MAY BE PLACED IN THE CONE SECTION OF THE MANHOLE. THE RIM-CONE JOINT IS NOT USUALLY TESTED. A VACUUM OF 10 INCHES OF MERCURY SHALL BE DRAWN. THE TIME FOR THE VACUUM TO DROP TO 9 INCHES OF MERCURY SHALL BE RECORDED. ACCEPTANCE FOR 4 FT. DIAMETER MANHOLES SHALL BE DEFINED AS WHEN THE TIME TO DROP TO 9 INCHES OF MERCURY MEETS OR EXCEEDS THE FOLLOWING:
FOR MANHOLES 5 FT. IN DIAMETER, ADD AN ADDITIONAL 15 SECONDS;
FOR MANHOLES 6 FT. IN DIAMETER, ADD AN ADDITIONAL 30 SECONDS
TO THE TIME REQUIREMENTS FOR FOUR FOOT DIAMETER MANHOLES.

3. LOW-PRESSURE AIR TEST OF PIPE LINES - TESTED PER ASTM STANDARD F-1417
PLUG ALL OPENINGS IN THE TEST SECTION. ADD AIR UNTIL THE INTERNAL PRESSURE OF THE LINE IS RAISED TO APPROXIMATELY 4.0 PSI. AFTER THIS PRESSURE IS REACHED, ALLOW THE PRESSURE TO STABILIZE. THE PRESSURE WILL NORMALLY DROP AS THE AIR TEMPERATURE STABILIZES. THIS USUALLY TAKES 2 TO 5 MIN. DEPENDING ON THE PIPE SIZE. THE PRESSURE MAY BE REDUCED TO 3.5 PSI BEFORE STARTING THE TEST.

WHEN THE PRESSURE HAS STABILIZED AND IS AT OR ABOVE THE STARTING TEST PRESSURE OF 3.5 PSI, START THE TEST. IF THE PRESSURE DROPS MORE THAN 1.0 PSI DURING THE TEST TIME, THE LINE IS PRESUMED TO HAVE FAILED THE TEST. IF A 1.0-PSI DROP DOES NOT OCCUR WITHIN THE TEST TIME, THE LINE HAS PASSED THE TEST.

TEST TIMES ARE FOR A 1.0 PSI PRESSURE DROP FROM 3.5 TO 2.5 PSI. IF THE SECTION OF LINE TO BE TESTED INCLUDES MORE THAN ONE PIPE SIZE, CALCULATE THE TEST TIME FOR EACH SIZE AND ADD THE TEST TIMES TO ARRIVE AT THE TOTAL TEST TIME FOR THE SECTION. MINIMUM TEST TIMES FOR VARIOUS PIPE SIZES IN INCHES ARE AS FOLLOWS:

SIZE (INCHES)	TIME (MIN./100 FT.)
UP TO 8	1.2
10	1.5
12	1.8

4. DEFLECTION TESTING OF PIPES-
IN ACCORDANCE WITH THE TEN STATES "RECOMMENDED STANDARDS FOR WASTEWATER FACILITIES - SECTION 33.85"-LATEST EDITION.

A. DEFLECTION TESTS SHALL BE PERFORMED ON ALL FLEXIBLE PIPE. THE TEST SHALL BE CONDUCTED AFTER THE FINAL BACKFILL HAS BEEN IN PLACE AT LEAST 30 DAYS TO PERMIT STABILIZATION OF THE SOIL-PIPE SYSTEM.

B. NO PIPE SHALL EXCEED A DEFLECTION OF 5 PERCENT. IF DEFLECTION EXCEEDS 5 PERCENT, THE PIPE SHALL BE EXCAVATED. REPLACEMENT OR CORRECTION SHALL BE ACCOMPLISHED IN ACCORDANCE WITH REQUIREMENTS IN THE APPROVED SPECIFICATIONS.

C. THE RIGID BALL OR MANDREL USED FOR THE DEFLECTION TEST SHALL HAVE A DIAMETER NOT LESS THAN 95 PERCENT OF THE BASE INSIDE DIAMETER OR AVERAGE INSIDE DIAMETER OF THE PIPE DEPENDING ON WHICH IS SPECIFIED IN THE ASTM SPECIFICATION, INCLUDING THE APPENDIX, TO WHICH THE PIPE IS MANUFACTURED. THE TEST SHALL BE PERFORMED WITHOUT MECHANICAL PULLING DEVICES.

SANITARY SEWER NOTES:

1. ALL WORK TO BE DONE IN ACCORDANCE WITH THE CODE OF THE TOWN OF YORKTOWN AND THE REGULATIONS OF THE WESTCHESTER COUNTY DEPARTMENT OF HEALTH.
2. SANITARY MANHOLES/CLEANOUT MANHOLES SHALL BE PRECAST CONCRETE.
3. ALL WORK SHALL BE MANUFACTURED IN ACCORDANCE WITH APPROVED STANDARDS AND SHALL BE SPACED A MAXIMUM DISTANCE OF 300' ON STRAIGHT RUNS AND INSTALLED AT EVERY CHANGE IN ALIGNMENT. MANHOLE POSITIONING SHALL BE AS TO PREVENT THE ENTRANCE OF SURFACE WATER DURING STORMS. MANHOLE RIMS ARE TO BE WATER TIGHT IN AREAS SUBJECT TO POSSIBLE FLOODING CONDITIONS.
4. ALL BUILDING LATERALS TO BE INSTALLED BY PLUMBERS, LICENSED IN THE TOWN OF YORKTOWN ACCORDING TO THE REQUIREMENTS OF THE TOWN OF YORKTOWN.
5. SANITARY SEWER CONSTRUCTION SHALL MEET ALL SEWER CONSTRUCTION SPECIFICATIONS FOR THE TOWN OF YORKTOWN.
6. THE TOWN ENGINEER SHALL BE NOTIFIED 48 HOURS PRIOR TO THE START OF ANY WORK.
7. A CODE 53 SHALL BE CALLED BEFORE THE START OF ANY EXCAVATION WORK.
8. A STREET OPENING PERMIT SHALL BE OBTAINED BY THE CONTRACTOR PRIOR TO ANY WORK BEING STARTED IN PUBLIC ROADS.
9. ALL SEWERS SHALL BE LAID AT LEAST 10 FT HORIZONTALLY FROM ANY EXISTING OR PROPOSED WATER MAIN. THE DISTANCE SHALL BE MEASURED EDGE TO EDGE. IN CASES WHERE IT IS IMPRACTICAL TO MAINTAIN A 10 FOOT SEPARATION, THE WESTCHESTER COUNTY DEPARTMENT OF HEALTH MAY ALLOW DEVIATION ON A CASE-BY-CASE BASIS, IF SUPPORTED BY DATA FROM THE DESIGN ENGINEER.
10. MANHOLE STEPS SHALL BE CAST IRON NEENAH NO. R-1981-0 OR CAMPBELL FOUNDRY NO. 2588-1 OR POLYPROPYLENE COATED STEEL (SEE SPECIFICATIONS) OR APPROVED EQUAL.
11. UNLESS OTHERWISE SPECIFIED, SANITARY SEWER MANHOLES SHALL HAVE THE LETTERS "SEWER" CAST ON THE COVER.
12. MANHOLE COVERS AND STRUCTURES SHALL MEET OR EXCEED A.S.T.M. AND O.S.H.A. REQUIREMENTS AND MUST BE RATED FOR H-20 LOADING. MANHOLES MUST BE MIN. 48" DIAMETER.
13. ALL SANITARY STRUCTURES SHALL RECEIVE 2 MIL COATS OF BITUMINOUS MATERIAL "INERTOL NO. 49" KOPPERS SUPPER SERVICE BLACK OR APPROVED EQUAL, APPLIED IN ACCORDANCE WITH MANUFACTURE'S SPECIFICATIONS.
14. 0-RING JOINTS TO CONFORM TO A.S.T.M. DESIGNATION C-443 LATEST REVISION. JOINTS TO BE MORTARED INSIDE AND OUT USING NON-SHRINKING MORTAR.
15. PRE-CAST MANHOLE SECTIONS TO BE IN ACCORDANCE WITH "PRE-CAST REINFORCED CONCRETE MANHOLE SECTIONS" A.S.T.M. DESIGNATION C-478, LATEST REVISION, MINIMUM COMPRESSIVE STRENGTH TO BE 4000 P.S.I. 22. WHERE SEWER MAIN IS TO BE INSTALLED 10' DEEP OR GREATER, PVC SDR-26 SHALL BE USED.
16. WHEN SEWER IS TO BE INSTALLED IN FILL MATERIAL, THE SUPPORTING FILL IS TO BE COMPACTED TO MINIMUM STANDARD PROCTOR DENSITY OF 95%, AND SHALL BE CERTIFIED TO THE TOWN.
17. WATER MAINS CROSSING HOUSE SEWERS, STORM SEWERS OR SANITARY SEWERS SHALL BE LAID TO PROVIDE A VERTICAL SEPARATION OF A MINIMUM OF 18" BETWEEN THE BOTTOM OF WATER MAIN AND TOP OF SEWER. IN ADDITION, ADEQUATE STRUCTURAL SUPPORT SHALL BE PROVIDED FOR THE SEWER TO PREVENT EXCESSIVE DEFLECTION OF THE JOINTS AND THE SEWER SETTLING AND BREAKING THE WATER MAIN. IN ADDITION THE LENGTH OF WATER PIPE IS TO BE CENTERED AT THE POINT OF CROSSING SO THAT THE JOINTS WILL BE EQUIDISTANT AND AS FAR AS POSSIBLE FROM THE SEWER. NO WATER MAIN SHALL PASS THROUGH OR COME IN CONTACT WITH ANY PART OF A SEWER OR SEWER MANHOLE.
18. MANHOLES AND SANITARY SEWER LINES SHALL BE TESTED TO CONFORM WITH WESTCHESTER COUNTY DEPARTMENT OF HEALTH RULES AND REGULATIONS AND AS PER SANITARY SEWER TESTING NOTES BELOW.
19. THE WESTCHESTER COUNTY DEPARTMENT OF HEALTH SHALL BE PROVIDED A 48 HOUR NOTICE PRIOR TO THE TESTING OF THE INSTALLED UTILITIES TO ALLOW WITNESSING OF TESTING BY THE DEPARTMENT.
20. ALL INSTALLATIONS AND TESTING SHALL BE IN ACCORDANCE WITH ASTM STANDARDS F-1417, C-1244 AND THE TEN STATES STANDARDS, LATEST VERSION.

WCHD NOTES:

1. UPON COMPLETION AND PRIOR USE, TWO SETS OF AS-BUILT PLANS MUST BE SUBMITTED ALONG WITH P.E. CERTIFICATION OF CONSTRUCTION AND ACCEPTABLE RESULTS OF AIR OR WATER TESTING OF SEWER AND MANHOLES.
2. WCHD MUST NE NOTIFIED A MINIMUM OF 48 HOURS PRIOR TO ANY LEAKAGE TEST.

OWNER/OPERATOR CERTIFICATION:

"I hereby certify under penalty of law that I understand and agree to comply with the terms and conditions of the SWPPP and agree to implement any corrective actions identified by the qualified inspector during a site inspection. I also understand that the owner or operator must comply with the terms and conditions of the most current version of the New York State Pollutant Discharge Elimination System ("SPDES") general permit for stormwater discharges from construction activities and that it is unlawful for any person to cause or contribute to a violation of water quality standards. Furthermore, I am aware that there are significant penalties for submitting false information, that I do not believe to be true, including the possibility of fine and imprisonment for knowing violations"

Name (please print): ______________________

Title: ______________________

Date: ______________________

Address: ______________________

Phone: ______________________

E-mail: ______________________

Signature: ______________________

Name of Trained Individual: ______________________

CONTRACTOR CERTIFICATION:

Contractor Certification Statement - All contractors and subcontractors identified in a SWPPP in accordance with Part III.A.6 (SPDES General Permit for Stormwater Runoff from Construction Activity, GP-0-20-001, January 2020) of this permit shall sign a copy of the following certification statement before undertaking any construction activity at the site identified in the SWPPP:

"I hereby certify that I understand and agree to comply with the terms and conditions of the SWPPP and agree to implement any corrective actions identified by the qualified inspector during a site inspection. I also understand that the Owner or Operator must comply with the terms and conditions of the New York State Pollutant Discharge Elimination System ("SPDES") general permit for stormwater discharges from construction activities and that it is unlawful for any person to cause or contribute to a violation of water quality standards. Furthermore, I understand that certifying false, incorrect or inaccurate information is a violation of the referenced permit and the laws of the State of New York and could subject me to criminal, civil and/or administrative proceedings."

Individual Contractor:

Name and Title (please print) ______________________

Signature of Contractor ______________________

Name of Trained Individual ______________________

Company / Contracting Firm:

Name of Company ______________________

Address of Company ______________________

Telephone / Cell Number ______________________

Site Information: ______________________

Address of Site ______________________

Tody's Date: ______________________

GENERAL EROSION CONTROL NOTES:

1. CONTRACTOR SHALL BE RESPONSIBLE FOR COMPLIANCE WITH ALL SEDIMENT AND EROSION CONTROL PRACTICES. THE SEDIMENT AND EROSION CONTROL PRACTICES ARE TO BE INSTALLED PRIOR TO ANY MAJOR SOIL DISTURBANCES, AND MAINTAINED UNTIL PERMANENT PROTECTION IS ESTABLISHED. ROAD SURFACE FLOWS FROM THE SITE SHOULD BE DISSIPATED WITH TRACKING PAD OR APPROPRIATE MEASURES DURING ADJACENT ROAD SHOULDER REGRADING. CONTRACTOR IS RESPONSIBLE FOR THE INSTALLATION AND MAINTENANCE OF ALL SOIL EROSION AND SEDIMENTATION CONTROL DEVICES THROUGHOUT THE COURSE OF CONSTRUCTION.
2. CATCH BASIN INLET PROTECTION MUST BE INSTALLED AND OPERATING AT ALL TIMES UNTIL TRIBUTARY AREAS HAVE BEEN STABILIZED. WHEN POSSIBLE FLOWS SHOULD BE STABILIZED BEFORE REACHING INLET PROTECTION STRUCTURE. TIMELY MAINTENANCE OF SEDIMENT CONTROL STRUCTURES IS THE RESPONSIBILITY OF THE CONTRACTOR.
3. ALL STRUCTURES SHALL BE MAINTAINED IN GOOD WORKING ORDER AT ALL TIMES. THE SEDIMENT LEVEL IN ALL SEDIMENT TRAPS SHALL BE CLOSELY MONITORED AND SEDIMENT REMOVED PROMPTLY WHEN MAXIMUM LEVELS ARE REACHED OR AS ORDERED BY THE ENGINEER. ALL SEDIMENT CONTROL STRUCTURES SHALL BE INSPECTED ON A REGULAR BASIS, AND AFTER EACH HEAVY RAIN TO INSURE PROPER OPERATION AS DESIGNED. AN INSPECTION SCHEDULE SHALL BE SET FORTH PRIOR TO THE START OF CONSTRUCTION.
4. THE LOCATIONS AND THE INSTALLATION TIMES OF THE SEDIMENT CAPTURING STANDARDS SHALL BE AS SPECIFIED IN THESE PLANS, AS ORDERED BY THE ENGINEER, AND IN ACCORDANCE WITH THE LATEST EDITION OF THE "NEW YORK STANDARDS AND SPECIFICATIONS FOR EROSION AND SEDIMENT CONTROL" (NYSSESC).
5. ALL TOPSOIL SHALL BE PLACED IN A STABILIZED STOCKPILE FOR REUSE ON THE SITE. ALL STOCKPILE MATERIAL REQUIRED FOR FINAL GRADING AND STORED ON SITE SHALL BE TEMPORARILY SEEDED AND MULCHED WITHIN 7 DAYS. REFER TO SOIL STOCKPILE DETAILS.
6. ANY DISTURBED AREAS THAT WILL BE LEFT EXPOSED MORE THAN 7 DAYS AND NOT SUBJECT TO CONSTRUCTION TRAFFIC, SHALL IMMEDIATELY RECEIVE TEMPORARY SEEDING. MULCH SHALL BE USED IF THE SEASON PREVENTS THE ESTABLISHMENT OF A TEMPORARY COVER. DISTURBED AREAS SHALL NOT BE LIMED AND FERTILIZED PRIOR TO TEMPORARY SEEDING.
7. IN AREAS WHERE SOIL DISTURBANCE ACTIVITY HAS TEMPORARILY OR PERMANENTLY CEASED, THE APPLICATION OF SOIL STABILIZATION MEASURES MUST BE INITIATED BY THE END OF THE NEXT BUSINESS DAY AND COMPLETED WITHIN SEVEN (7) DAYS FROM THE DATE THE CURRENT SOIL DISTURBANCE ACTIVITY CEASED.
8. ALL DISTURBED AREAS WITHIN 500 FEET OF AN INHABITED DWELLING SHALL BE WETTED AS NECESSARY TO PROVIDE DUST CONTROL.
9. THE CONTRACTOR SHALL KEEP THE ROADWAYS WITHIN THE PROJECT CLEAR OF SOIL AND DEBRIS AND IS RESPONSIBLE FOR ANY STREET CLEANING NECESSARY DURING THE COURSE OF THE PROJECT.
10. SEDIMENT AND EROSION CONTROL STRUCTURES SHALL BE REMOVED AND THE AREA STABILIZED WHEN THE DRAINAGE AREA HAS BEEN PROPERLY STABILIZED BY PERMANENT MEASURES.
11. ALL SEDIMENT AND EROSION CONTROL MEASURES SHALL BE INSTALLED IN ACCORDANCE WITH CURRENT EDITION OF NYSSESC.
12. ALL REGRADED AREAS MUST BE STABILIZED APPROPRIATELY PRIOR TO ANY ROCK BLASTING, CUTTING, AND/OR FILLING OF SOILS. SPECIAL CARE SHOULD BE TAKEN DURING CONSTRUCTION TO INSURE STABILITY DURING MAINTENANCE AND INTEGRITY OF CONTROL STRUCTURES.
13. ANY SLOPES GRADED AT 3:1 OR GREATER SHALL BE STABILIZED WITH EROSION BLANKETS TO BE STAKED INTO PLACE IN ACCORDANCE WITH THE MANUFACTURES REQUIREMENTS. EROSION BLANKETS MAY ALSO BE REQUIRED AT THE DISCRETION OF TOWN OFFICIALS OR PROJECT ENGINEER. WHEN STABILIZED BLANKET IS UTILIZED FOR CHANNEL STABILIZATION, PLACE ALL OF THE VOLUME OF SEED MIX PRIOR TO LAYING NET, OR AS RECOMMENDED BY THE MANUFACTURER.
14. TO PREVENT HEAVY CONSTRUCTION EQUIPMENT AND TRUCKS FROM TRACKING SOIL OFF-SITE, CONSTRUCT A PERVIOUS CRUSHED STONE PAD. LOCATE AND CONSTRUCT PADS AS DETAILED IN THESE PLANS.
15. CONTRACTOR IS RESPONSIBLE FOR CONTROLLING DUST BY SPRINKLING EXPOSED SOIL AREAS PERIODICALLY WITH WATER AS REQUIRED. CONTRACTOR TO SUPPLY ALL EQUIPMENT AND WATER.
16. CONTRACTOR SHALL BE RESPONSIBLE FOR CONSTRUCTION INSPECTIONS AS PER NYSDEC GP-0-20-001 AND TOWN OF YORKTOWN CODE.
17. ALL HYDRAULIC LINES ON ALL CONSTRUCTION EQUIPMENT AND VEHICLES MUST BE CHECKED AT THE END OF EACH WORKDAY TO MINIMIZE THE POSSIBILITY OF ACCIDENTAL LEAKAGE OF ANY HYDRAULIC FLUIDS.

MAINTENANCE OF TEMPORARY EROSION AND SEDIMENT CONTROL STRUCTURES:

N.Y.S.D.E.C. GP-0-20-001 EXPOSURE RESTRICTIONS - STATES THAT ANY EXPOSED EARTHWORK SHALL BE STABILIZED IN ACCORDANCE WITH THE GUIDELINES OF THIS PLAN.

1. TREES AND VEGETATION SHALL BE PROTECTED AT ALL TIMES AS SHOWN ON THE DETAIL DRAWING AND AS DIRECTED BY THE ENGINEER.
2. CARE SHOULD BE TAKEN SO AS NOT TO CHANNEL CONCENTRATED RUNOFF THROUGH THE AREAS OF CONSTRUCTION ACTIVITY ON THE SITE.
3. FILL AND SITE DISTURBANCES SHOULD NOT BE CREATED WHICH CAUSES WATER TO POND OFF SITE OR ON ADJACENT PROPERTIES.
4. RUNOFF FROM LAND DISTURBANCES SHALL NOT BE DISCHARGED OR HAVE THE POTENTIAL TO DISCHARGE OFF SITE WITHOUT FIRST BEING INTERCEPTED BY A CONTROL STRUCTURE, SUCH AS A SEDIMENT TRAP OR SILT FENCE. SEDIMENT SHALL BE REMOVED BEFORE EXCEEDING 50% OF THE RETENTION STRUCTURE'S CAPACITY.
5. FOR FINISHED GRADING, ADEQUATE GRADE SHALL BE PROVIDED SO THAT WATER WILL NOT POND ON LAWNS FOR MORE THAN 24 HOURS AFTER RAINFALL, EXCEPT IN SWALE FLOW AREAS WHICH MAY DRAIN FOR AS LONG AS 48 HOURS AFTER RAINFALL.
6. ALL SWALES AND OTHER AREAS OF CONCENTRATED FLOW SHALL BE PROPERLY STABILIZED WITH TEMPORARY CONTROL MEASURES TO PREVENT EROSION AND SEDIMENT TRAVEL. SURFACE FLOWS OVER CUT AND FILL AREAS SHALL BE STABILIZED AT ALL TIMES.
7. ALL SITES SHALL BE STABILIZED WITH EROSION CONTROL MATERIALS WITHIN 7 DAYS OF FINAL GRADING.
8. TEMPORARY SEDIMENT TRAPPING DEVICES SHALL BE REMOVED FROM THE SITE WITHIN 30 DAYS OF FINAL STABILIZATION.

MAINTENANCE SCHEDULE:

	DAILY	WEEKLY	MONTHLY	AFTER RAINFALL	NECESSARY TO MAINTAIN FUNCTION	AFTER APPROVAL OF INSPECTOR
SILT FENCE	— — —	— — — —	INSP.	INSP.	CLEAN OF SEDIMENT/ REPLACE IF BULGES FORM	REMOVE
STABILIZED CONST. ENT.	CLEAN OF SEDIMENT	INSP.	— — — —	— — — —	MAINTAIN CONDITION TO PREVENT SEDIMENT TRACKING	REMOVE
SOIL STOCKPILE	— — —	INSP.	INSP.	INSP.	MAINTAIN VEGETATIVE COVER WITH SEEDING	REMOVE
OUTLET/ INLET STRUCTURES & PROTECTION	— — —	INSP.	INSP.	INSP.	REMOVE SEDIMENT AT 50% STORAGE CAPACITY	REMOVE
CONCRETE WASHOUT	INSPECTION (INSP.)	INSP.	INSP.	INSP.	REMOVE HARDENED CONCRETE WHEN 75% FULL	REMOVE
EROSION CONTROL BLANKET	— — —	INSP.	INSP.	INSP.	MAINTAIN COVER WITH SEEDING AND ANCHORING	REMOVE AFTER 80% UNIFORM VEGETATION GROWTH
CONSTRUCTION FENCE	— — —	— — — —	INSP.	INSP.	REPLACE DAMAGED AREAS AND REMOVE SEDIMENT	REMOVE

TOPSOIL:

Existing topsoil will be removed and stored in piles sufficiently as to avoid mixing with other excavation. Stockpiles shall be surrounded by erosion control as outlined on these plans. The furnishing of new topsoil shall be of a better or equal to the following criteria (SS713.01 NYSDOT):

1. The pH of the material shall be 5.5 to 7.6.
2. The organic content shall not be less than 2% or more than 70%.
3. Gradation:

SIEVE SIZE	% PASSING BY WGT.
2 INCH	100
1 INCH	85 TO 100
1/4 INCH	65 TO 100
NO. 200 MESH	20 TO 80

PERMANENT VEGETATIVE COVER:

1. Site preparation:
   - 1.1. Install erosion control measures.
   - 1.2. Scarify compacted soil areas.
   - 1.3. Lime as required to ph 6.5.
   - 1.4. Fertilize with 10-6-4 4 lbs/1,000 S.F.
   - 1.5. Incorporate amendments into soil with disc harrow.
2. Seed mixtures for use on swales and cut and fill areas.

MIXTURE		LBS./ACRE
ALT. A	KENTUCKY BLUE GRASS	20
	CREEPING RED FESCUE	28
	RYE GRASS OR REDTOP	5
ALT. B	CREEPING RED FESCUE	20
	REDTOP	2
	TALL FESCUE/SMOOTH BLOOMGRASS	20

3. SEEDING
   - 3.1. Prepare seed bed by raking to remove stones, twigs, roots and other foreign material.
   - 3.2. Apply soil amendments and integrate into soil.
   - 3.3. Apply seed uniformly by cyclone seeder culti-packer or hydro-seeder at rate indicated.
   - 3.4. Stabilize seeded areas in drainage swales.
   - 3.5. Irrigate to fully saturate soil layer, but not to dislodge planting soil.
   - 3.6. Seed between April 1st and May 15th or August 15th and October 15th.
   - 3.7. Seeding may occur May 15th and August 15th if adequate irrigation is provided.

TEMPORARY VEGETATIVE COVER:

SITE PREPARATION:
1. Install erosion control measures.
2. Scarify areas of compacted soil.
3. Fertilize with 10-10-10 at 400/acre.
4. Lime as required to ph 6.5.

SEED SPECIES:

MIXTURE	LBS./ACRE
Rapidly germinating annual ryegrass (or approved equal)	20
Perennial ryegrass	20
Cereal oats	36

SEEDING:
Same as permanent vegetative cover

CONSTRUCTION SEQUENCE

RECOMMENDED SEQUENCE OF CONSTRUCTION

USE OF EROSION AND SEDIMENT CONTROL STRUCTURES AND PRACTICES ARE IMPORTANT FOR MAINTAINING SITE STABILITY UNDER RUNOFF AND DURING DAILY CONSTRUCTION ACTIVITIES. THE CONSTRUCTION SEQUENCE SHOULD BE STAGED WITH EROSION AND SEDIMENT CONTROLS, AS FOLLOWS, WITH ALL CONTROLS IN PLACE AND IMPLEMENTED PRIOR TO RESPECTIVE INFRASTRUCTURE CONSTRUCTION. AS CONSTRUCTION PROCEEDS, THE CONTROLS SHOULD BE MONITORED, MAINTAINED AND REPLACED AS NEEDED. ADDITIONAL CONTROLS MAY BE REQUIRED AS NEEDED TO ADDRESS UNFORESEEN SITUATIONS.

REFER TO THE CONSTRUCTION DRAWINGS FOR ALL PLANS AND DETAILS WHICH RELATE TO THE CONSTRUCTION SEQUENCE. THIS SEQUENCE SHOULD BE FOLLOWED IN CONJUNCTION WITH ALL PLANS, NOTES, AND THE STORMWATER POLLUTION PREVENTION PLAN. PRIOR TO THE COMMENCEMENT OF WORK, THE OWNER AND GENERAL CONTRACTOR SHALL READ AND UNDERSTAND THE SEQUENCE FOR CONSTRUCTION. THE SEQUENCE SHALL BE DISCUSSED AT THE TIME OF THE PRE-CONSTRUCTION MEETING.

DURING CONSTRUCTION OF THE PROJECT, THE CONTRACTOR IS RESPONSIBLE TO COORDINATE ALL REQUIRED INSPECTIONS WITH VARIOUS AGENCIES AND THE PROJECT ENGINEER.

GENERAL SEQUENCE: THE GENERAL SEQUENCE APPLIES TO THE START OF ALL WORK FOR THE PROJECT. THE REQUIREMENTS IN SUCH SHALL BE APPLIED AS APPROPRIATE AND SHALL BE ASSUMED IN PLACE PRIOR TO THE START OF THE WORK OUTLINED IN THE SEQUENCE.

1. PRIOR TO THE BEGINNING OF ANY SITE WORK THE MAJOR FEATURES OF THE CONSTRUCTION MUST BE FIELD STAKED BY A LICENSED SURVEYOR. THESE INCLUDE THE BUILDINGS, ROADS, LIMITS OF DISTURBANCE, UTILITY LINES, AND STORMWATER PRACTICES.
2. PRIOR TO THE START OF THE PROJECT, AN ON-SITE PRE-CONSTRUCTION MEETING WILL BE HELD. THIS WILL BE ATTENDED BY THE PROJECT OWNER, THE OPERATOR RESPONSIBLE FOR COMPLYING WITH THE APPROVED CONSTRUCTION DRAWINGS INCLUDING THE EROSION AND SEDIMENT CONTROL (E&SC) PLAN AND DETAILS, THE DESIGN ENGINEER, THE ENGINEER RESPONSIBLE FOR E&SC MONITORING DURING CONSTRUCTION, TOWN REPRESENTATIVES FROM THE ENGINEERING DEPARTMENT AND CODE ENFORCEMENT, AND REPRESENTATIVES FROM THE NYC DEP. THE DEP SHALL BE NOTIFIED 48HRS PRIOR TO THE PRECONSTRUCTION MEETING.
3. CUT AND CLEAR TREES WITHIN THE WORK LIMITS AS NECESSARY FOR THE AREAS TO BE DISTURBED. INSTALL TREE PROTECTIVE MEASURE AT MARKED LOCATIONS ON E&SC PLAN.
4. INSTALL ALL TEMPORARY EROSION CONTROL MEASURES AS SHOWN ON THE EROSION AND SEDIMENT CONTROL PLAN FOR THE PROJECT'S IMMEDIATE DISTURBANCE AREAS. THIS SHALL INCLUDE, BUT NOT LIMITED TO SILT FENCE, STABILIZED CONSTRUCTION ENTRANCES, CONSTRUCTION FENCE, ETC. THIS SEQUENCE MUST BE FOLLOWED TO ENSURE PROPER IMPLEMENTATION OF THE EROSION AND SEDIMENT CONTROL PLAN (E&SC) AND STORMWATER POLLUTION PREVENTION PLAN (SWPPP). DURING CONSTRUCTION, RUNOFF WILL SHEET FLOW ACROSS THE SITE TO THE PERIMETER WHERE IT WILL BE PASS THROUGH SILT FENCING.
5. TIMBERED TREES AND WOODCHIPS SHALL BE TEMPORARILY STORED IN THE STOCKPILE AND/OR STAGING AREA IF NECESSARY, BEFORE BEING REMOVED OFF-SITE. WOODCHIPS MAY BE USED FOR MULCH TO STABILIZE DISTURBED AREAS. WOODCHIP MULCH SHALL BE APPLIED AT A MINIMUM RATE OF 500 LBS. PER 1000 SF (2" THICK MINIMUM).
6. REMOVE EXISTING VEGETATIVE COVER, CUT AND CLEAR TREES, GRUB, REMOVE STUMPS AND OTHER SURFACE FEATURES IN THE LIMIT OF CONSTRUCTION ONLY. ANY DISTURBANCE THAT RESULTS FROM TREE CLEARING AND GRUBBING SHALL BE IMMEDIATELY STABILIZED WITH WOODCHIPS MULCH, HYDRO-MULCH, OR STRAW AND SEED. TIMBERED TREES, WOOD CHIPS, AND STUMPS SHALL BE REMOVED OFF-SITE UNLESS OTHERWISE DIRECTED. AS STATED, WOODCHIPS MAY BE STOCKPILED FOR USE AS STABILIZING GROUND COVER. DEMOLISH AND/OR REMOVE EXISTING FEATURES AS PER PLAN AND DISPOSE OF OR STOCKPILE AS REQUIRED BY THE OWNER. ALL CONSTRUCTION DEBRIS SHALL BE PROPERLY DISPOSED OF IN ACCORDANCE WITH ALL FEDERAL, STATE, AND LOCAL REQUIREMENTS.
7. NO MORE THAN FIVE ACRES SHALL BE DISTURBED ON SITE AT ONE TIME.
8. THE SURVEYOR SHALL STAKE-OUT THE PROPOSED ROADWAY CENTERLINES, PARKING LOT LIMITS, LIMITS OF CUT AND BUILDINGS.
9. ONCE THE TREE REMOVAL OPERATION IS COMPLETE, STRIP THE TOPSOIL WITHIN THE WORK BOUNDARY AND PLACE EXCAVATED TOPSOIL WITHIN THE IDENTIFIED STOCKPILE LOCATIONS. ANY SOILS SO DEEMED BY THE DESIGN OR MONITORING ENGINEER SHALL BE STOCKPILED FOR FUTURE USE AS LANDSCAPED AREA TOPSOIL. CONTRACTOR SHALL TAKE EVERY PRECAUTION FEASIBLE TO REDUCE THE AMOUNT OF DISTURBED/EXPOSED SOILS DURING CONSTRUCTION.
10. ANY DISTURBED AREA THAT WILL NOT BE FURTHER DISTURBED WITHIN SEVEN (7) DAYS SHALL BE IMMEDIATELY STABILIZED WITH WOODCHIPS, HYDRO-MULCH, OR STRAW AND SEED IN ACCORDANCE WITH SPDES GENERAL PERMIT GP-025-001.
11. INSTALL NEW DRAINAGE AND CURBING.
12. BEGIN ROUGH GRADING OF NEW PARKING WITHIN WORK LIMITS AND ADJACENT AREAS. SLOPES IN EXCESS OF 3H:1V SHALL NOT BE LEFT EXPOSED AND MUST BE STABILIZED. ONCE SUBGRADE ELEVATION IS SET, INSTALL ITEM BASE COURSE. BEGIN GRADING WORKING FROM INSIDE THE SITE. ONCE GRADES HAVE BEEN ESTABLISHED, INSTALL OR REPLACE THE CONSTRUCTION ENTRANCE.
13. BEGIN ROUGH GRADING THE BUILDING PADS FOR THE BUILDINGS. ALL COMPACTION REQUIREMENTS SHALL BE MET WITHIN THE FILL SECTIONS. (THIS WORK SHALL INCLUDE THE COMMENCEMENT OF THE RETAINING WALLS AROUND THE PROPOSED BUILDING CONSTRUCTION.) UPON COMPLETION OF THE GRADING, TEMPORARY SEED OR HYDRO-MULCH THE EMBANKMENT AND INSTALL EROSION CONTROL BLANKETS AS SHOWN ON THE PLANS. DURING BUILDING AND SITE CONSTRUCTION, MAINTAIN AND RE-ESTABLISH AS REQUIRED, EROSION CONTROL AND STABILIZATION MEASURES AS REQUIRED BY THE SITE PLAN AND DETAILS. AREAS WHICH ARE TO REMAIN UNDISTURBED FOR MORE THAN SEVEN (7) DAYS SHALL BE STABILIZED WITH TEMPORARY SEEDING OR MULCH.
14. BEGIN PREPARATION OF THE BUILDING SITE AND EXCAVATION OF THE BUILDING FOUNDATION AS WELL AS CONSTRUCTION OF ALL RETAINING WALLS. REBAR AND FOOTINGS OF ALL RETAINING WALLS SHALL BE INSPECTED BY THE DESIGN ENGINEER OR TOWN PRIOR TO CONCRETE POUR. AREAS IN WHICH FINAL GRADE IS ACHIEVED SHALL BE IMMEDIATELY STABILIZED WITH PERMANENT VEGETATIVE COVER. PERMANENT SLOPES OF 3:1 OR GREATER SHALL RECEIVE EROSION BLANKETS.
15. BEGIN CONSTRUCTION OF THE FOUNDATION. UPON COMPLETION AND AFTER PROPER CURING TIME IS ACHIEVED, BACKFILL THE FOUNDATION AND BRING SITE TO ROUGH GRADE. IN AREAS WHERE SOIL DISTURBANCE ACTIVITY HAS TEMPORARILY OR PERMANENTLY CEASED, THE APPLICATION OF SOIL STABILIZATION MEASURES MUST BE INITIATED BY THE END OF THE NEXT BUSINESS DAY AND COMPLETED WITHIN SEVEN (7) DAYS FROM THE DATE THE CURRENT SOIL DISTURBANCE ACTIVITY CEASED.
16. ONCE BUILDING FOUNDATIONS AND RETAINING WALLS HAVE BEEN COMPLETED, BRING THE SITE TO THE FINAL SUBGRADE ELEVATION.
17. PROCEED WITH THE CONSTRUCTION OF THE BUILDINGS. THIS INCLUDES THE BUILDING STRUCTURE ITSELF, RETAINING WALLS, AND ROUGH GRADES. AT ANY POINT DURING THIS BEGIN INSTALLATION OF THE UTILITIES INCLUDING THE WATER AND SEWER CONNECTIONS, DRAINAGE AND POWER UTILITIES. CONCRETE TRUCKS SHALL BE WASHED OUT IN THE LOCATION SHOWN ON THE PLANS.
18. STAKE-OUT THE LOCATION OF UTILITIES AND UTILITY STRUCTURES. BEGIN INSTALLATION OF STORMWATER MANAGEMENT SYSTEMS.
19. WHEN THE DRAINAGE IMPROVEMENTS ARE COMPLETE, THE UPSTREAM DRAINAGE STRUCTURE SHALL BE BLOCKED TO NOT ALLOW SEDIMENT LADEN WATER FROM REACHING THE SUBSURFACE CHAMBERS.
20. BACKFILL AS INSTALLATION IS COMPLETE AND STABILIZE THE AREA. IF TRENCHES ARE TO BE LEFT OPEN, PLACE EXCAVATED MATERIAL ON THE UP-SLOPE SIDES OF THE TRENCH AND PROTECT AND STABILIZE IF IT IS TO REMAIN OPEN FOR AN EXTENDED PERIOD OF SEVEN (7) DAYS OR MORE.

FINAL SITE STABILIZATION AND COMPLETION OF NEW CONSTRUCTION:

21. UPON COMPLETION OF ALL WORK, THE SITE SHALL BE INSPECTED BY THE SUPERVISING ENGINEER AND TOWN INSPECTOR TO DETERMINE COMPLETION OF ALL WORK AND PERMANENT STABILIZATION OF THE SITE.
22. ANY AREAS DEEMED INCOMPLETE OR NOT PROPERLY STABILIZED SHALL BE DONE SO TO THE SATISFACTION TO THE SUPERVISING ENGINEER AND TOWN INSPECTOR.
23. ONCE THE SITE IS DEEMED ADEQUATELY STABLE THE TEMPORARY EROSION AND SEDIMENT CONTROL MEASURES CAN BE REMOVED. AT THAT TIME IF DEEMED APPROPRIATE DRAINAGE STRUCTURES UPSTREAM FROM THE SUBSURFACE STORMWATER MANAGEMENT SYSTEMS SHALL BE CLEANED OF SEDIMENT AND DEBRIS. THEY CAN THEN BE UNBLOCKED TO ALLOW FOR FLOW OF COLLECTED SURFACE RUNOFF.

OWNER/OPERATOR CERTIFICATION

"I hereby certify under penalty of law that I understand and agree to comply with the terms and conditions of the SWPPP and agree to implement any corrective actions identified by the *qualified inspector* during a site inspection. I also understand that the *owner or operator* must comply with the terms and conditions of the most current version of the New York State Pollutant Discharge Elimination System ("SPDES") general permit for stormwater *discharges* from *construction activities* and that it is unlawful for any person to cause or contribute to a violation of *water quality standards*. Furthermore, I am aware that there are significant penalties for submitting false information, that I do not believe to be true, including the possibility of fine and imprisonment for knowing violations"

Name (please print) ______________________

Title ______________________

Date ______________________

Address ______________________

Phone ______________________

E-mail ______________________

Signature ______________________

Name of Trained Individual ______________________

CONTRACTOR CERTIFICATION

Contractor Certification Statement - All contractors and subcontractors identified in a SWPPP in accordance with Part III.A.6 (SPDES General Permit for Stormwater Runoff from Construction Activity, GP-0-20-001, January 2020) of this permit shall sign a copy of the following certification statement before undertaking any construction activity at the site identified in the SWPPP:

"I hereby certify that I understand and agree to comply with the terms and conditions of the SWPPP and agree to implement any corrective actions identified by the qualified inspector during a site inspection. I also understand that the O*wner or Operator* must comply with the terms and conditions of the New York State Pollutant Discharge Elimination System ("SPDES") general permit for stormwater discharges from construction activities and that it is unlawful for any person to cause or contribute to a violation of water quality standards. Furthermore, I understand that certifying false, incorrect or inaccurate information is a violation of the referenced permit and the laws of the State of New York and could subject me to criminal, civil and/or administrative proceedings."

Individual Contractor:

Name and Title (please print) ______________________

Signature of Contractor ______________________

Name of Trained Individual ______________________

Company / Contracting Firm:

Name of Company ______________________

Address of Company ______________________

Telephone Number / Cell Number ______________________

Site Information:

Address of Site ______________________

____

Today's Date: ______________________

SAFE DIG
Before You Dig, Drill or Blast!
Call 811 before you dig
CALL US TOLL FREE 811 or 1-800-962-7962 NY Industrial Code Rule 753 requires no less than two working days notice, but not more than ten days notice. www.digsafelynewyork.com

Site Design Consultants
Civil Engineers • Land Planners
251-F Underhill Avenue, Yorktown Heights, NY 10598
(914) 962-4488 - Fax: (914) 962-7386
www.sitedesignconsultants.com

Engineer:
STATE OF NEW YORK • JOSEPH CARLO RIINA • No. 64431 • LICENSED PROFESSIONAL ENGINEER
Joseph C. Riina, P.E.
NYS Lic. No. 64431

PROJECT # 23-18

Revisions: No.	Date	Comments:

Revisions: No.	Date	Comments:

SCALE:

DRAWN BY: AKM

DATE: 06/18/25

NOTES

SITE PLAN
PREPARED FOR
AMS YORKTOWN ACTIVE ADULT COMMUNITY
800 EAST MAIN STREET
Town of Yorktown
Westchester County, NY

Sheet G-101

COPYRIGHT © 2025 BY SITE DESIGN CONSULTANTS, ALL RIGHTS RESERVED

F:\2023\23-18 AMS - E MAIN STREET YORKTOWN\ENGINEERING\CAD\C3D-23-18 AMS MAIN STREET YORKTOWN\23-18 AMS DETAILS.DWG 1/16/2017 3:19:52 PM

NOTE: UNAUTHORIZED ALTERATIONS OR ADDITIONS TO THIS DRAWING IS A VIOLATION OF SECTION 7209 (2) OF THE NEW YORK STATE EDUCATION LAW.

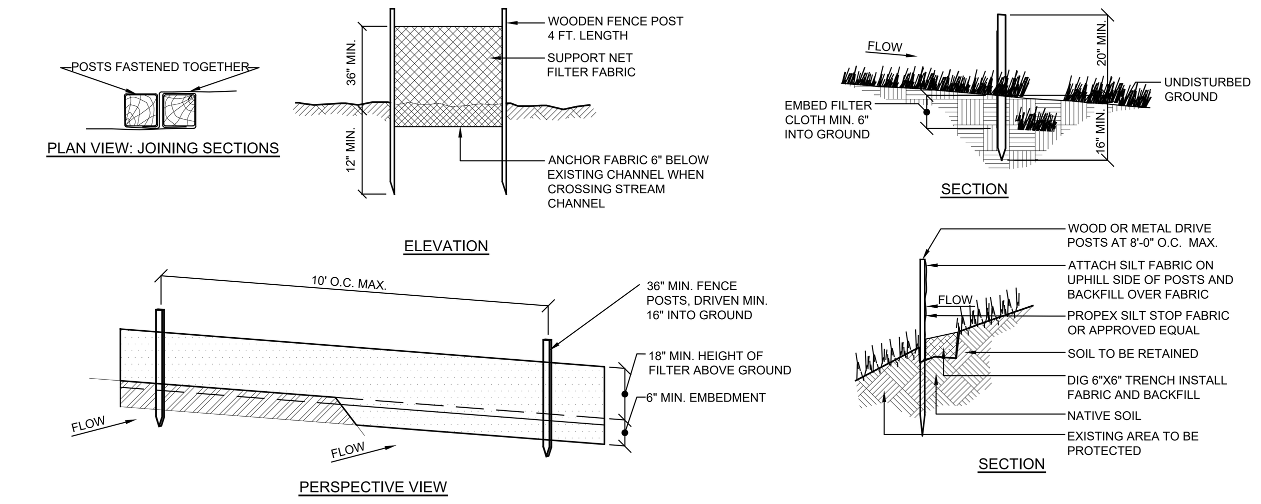

NOTES:
1. Filter cloth to be fastened securely to post: steel either t or u type or 2" hardwood posts at top and mid section.
2. When two sections of filter cloth adjoin each other they shall be overlapped by 6 inches and folded. Filter cloth shall be mirafi 100x, stabilinka t140n or approved equal
3. Maintenance shall be performed as needed and material removed when "bulges" develop in the silt fence.
4. Excavate 4 inch trench along the lower perimeter of the site.
5. Unroll a section at a time and position the post against the back (downstream) wall of the trench (net side away from direction of flow).
6. Drive the post into the ground until the netting is approximately 2 inches from the trench bottom.
7. Lay the toe-in flap of fabric onto the undisturbed bottom of the trench, backfill the trench and tamp the soil. Steeper slopes require an intercept trench.
8. Join sections as shown above.

SYMBOL

E-1 **SILT FENCE DETAIL**
NOT TO SCALE

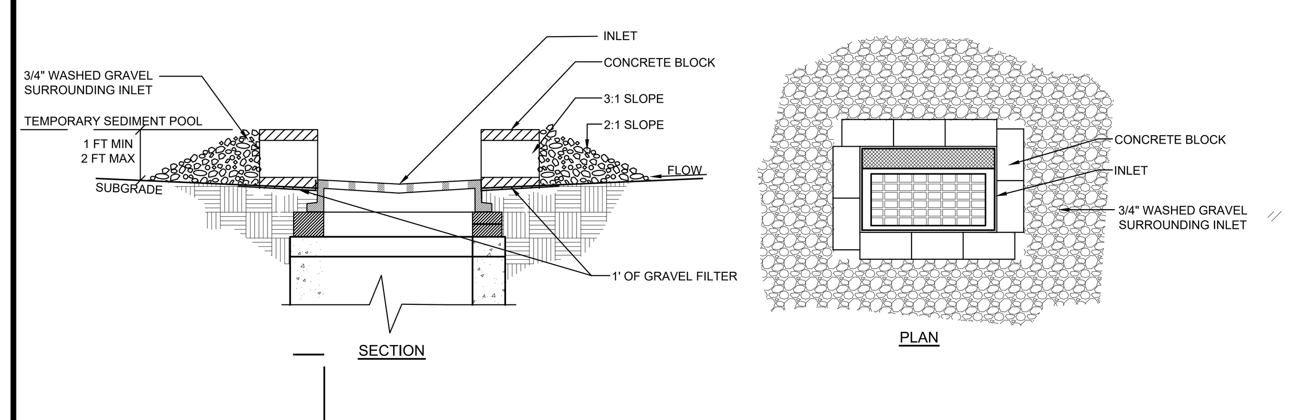

SYMBOL

E-2 **STONE & BLOCK INLET PROTECTION DETAIL**
NOT TO SCALE

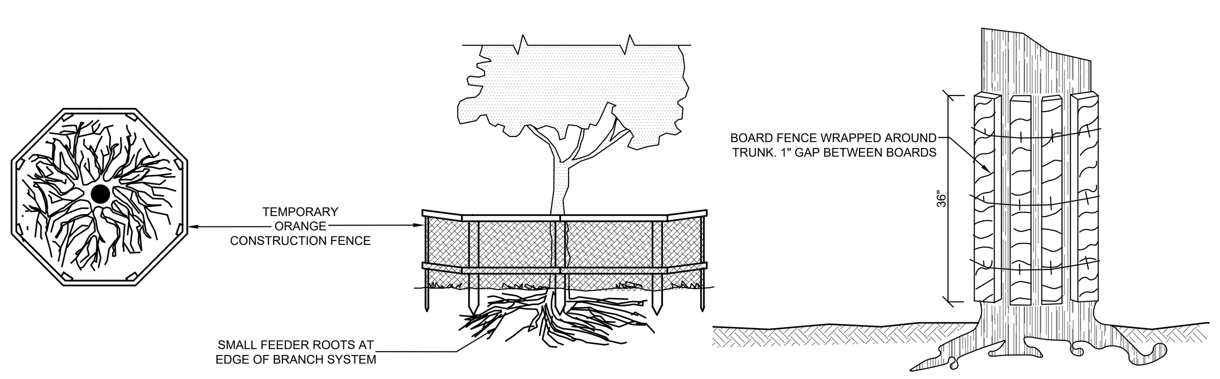

NOTES:
1. Contractor shall use the tree trunk armor detail for isolated trees that require protection.
2. As an alternate, the contractor may protect trees in the vicinity of regular heavy traffic / construction areas or clusters of trees to be protected as per the construction fence detail.

SYMBOL

E-3 **TREE TRUNK ARMOR / TREE PROTECTION DETAIL**
NOT TO SCALE

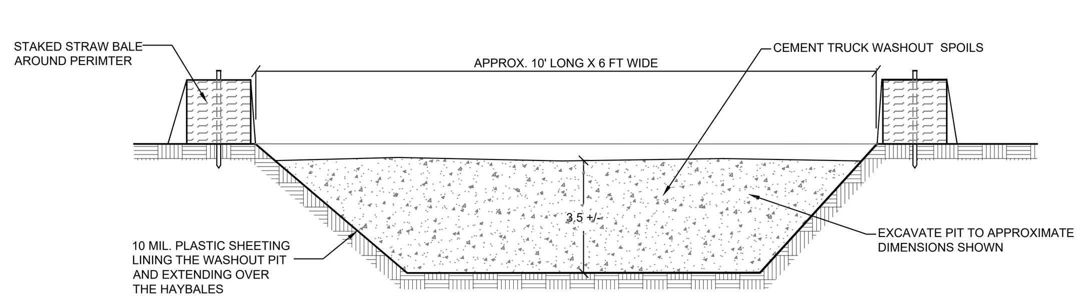

NOTE:
1. Upon hardening of washout concrete residual, material shall be left in place and buried or broken up for removal and disposal.
2. Once the washout material reaches 6" from the surface, a new pit should be created for additional washout concrete residual.
3. The washout pit shall be located at least 50 ft. from storm drains, open ditches,or waterbodies.
4. Inspections shall be made daily. When 75% capacity has been reached a determination shall be made as to whether materials shall be removed. Upon removal and disposal of materials the liner shall be checked for tears. If so liner shall be replaced. Liquids shall be shall be removed by pumping out and disposed of in a proper manner. Solid washout waste can be broken up and buried on site or disposed of off site.

E-4 **CEMENT TRUCK WASHOUT PIT DETAIL**
NOT TO SCALE

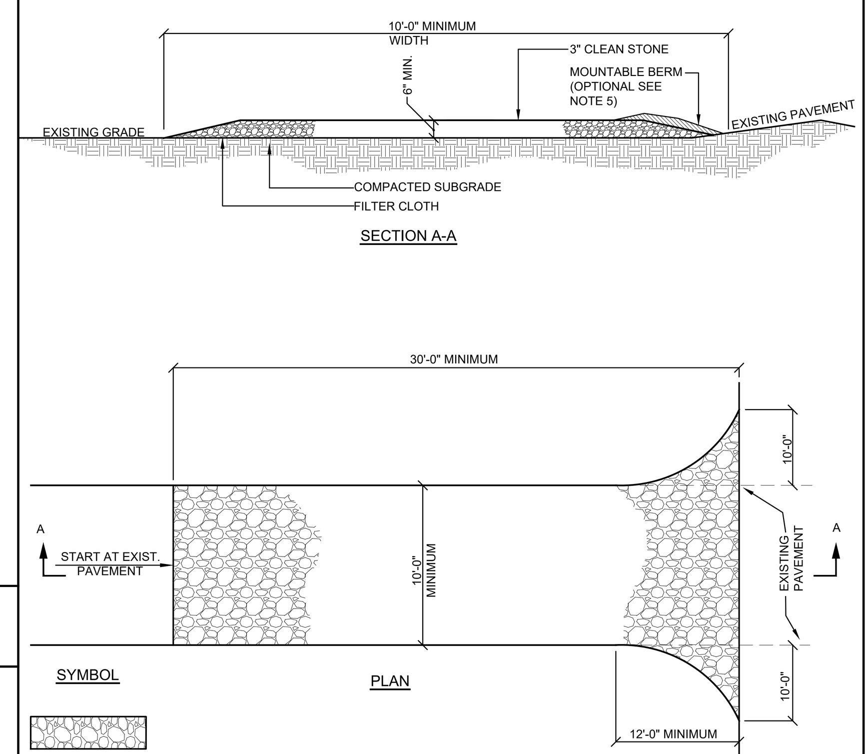

SYMBOL

INSTALLATION NOTES:
1. Stone size - use 3" min. Stone, or reclaimed or recycled concrete equivalent.
2. Length - as required, but not less than 50 feet (except on a single residence lot where a 30 foot minimum length would apply.
3. Thickness - not less than six (6) inches.
4. Width - 10 foot minimum, but not less than the full width at points where ingress or egress occur. 24 ft if single entrance to site.
5. Surface water - all surface water flowing or diverted toward construction entrances shall be piped across the entrance. If piping is impractical, a mountable berm with 5:1 slopes will be permitted.
6. Maintenance - the entrance shall be maintained in a condition which will prevent tracking or flowing of sediment onto public right of way this may require periodic top dressing with additional stone as conditions demand and repair and/or cleanouts of any measures used to trap sediment. All sediment spilled, dropped, washed or tracked onto public right of way must be removed immediately.
7. Washing - wheels shall be cleaned to remove sediment prior to entrance onto public right of way. When washing is required, it shall be done on an area stabilized with stone and which drains into an approved sediment trapping device.
8. Periodic inspection and needed maintenance shall be provided after each rain

E-5 **STABILIZED CONSTRUCTION ENTRANCE DETAIL**
NOT TO SCALE

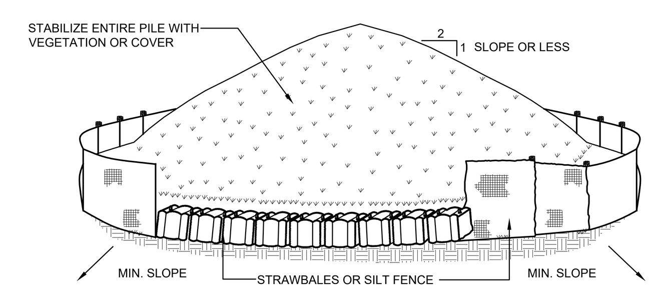

SYMBOL

NOTES:
1. Area chosen for stockpiling operations shall be dry and stable.
2. Maximum slope of stockpile shall be 1:2.
3. Upon completion of soil stockpiling, each pile shall be surrounded with either silt fencing or strawbales, then stabilized with vegetation or covered.
4. See detail for installation of silt fence.

E-6 **SOIL STOCKPILE DETAIL**
NOT TO SCALE

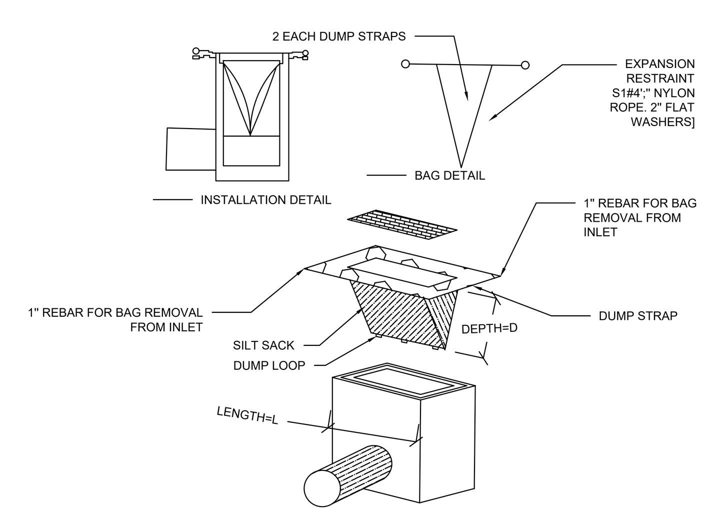

E-7 **SILTSACK DETAIL**
NOT TO SCALE

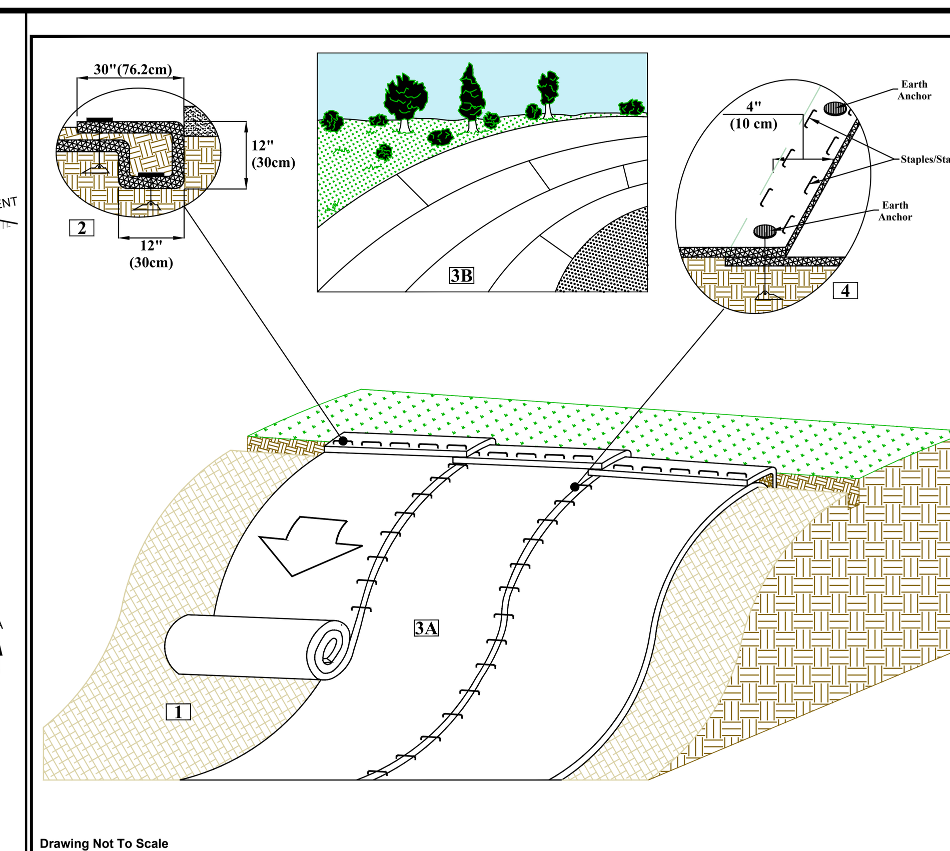

SLOPE INSTALLATION EARTH ANCHOR (EA) DETAIL

1. Prepare soil before installing high-performance turf reinforcement mats (HP-TRMs), including any necessary application of lime, fertilizer, and seed.
2. Begin at the top of the slope by anchoring the HP-TRMs in a 12" (30 cm) deep x 12" (30cm) wide trench with approximately 30" (76.2 cm) of HP-TRMs extended beyond the up-slope portion of the trench. Anchor the HP-TRMs with an alternating row of staples and anchors approximately 30" (76.2 cm) apart in the bottom of the trench. Backfill and compact the trench after stapling. Fold remaining 30" (76.2 cm) portion of HP-TRMs back over compacted soil. Secure HP-TRMs over compacted soil with an alternating row of staples/anchors spaced approximately 18" (45 cm) apart across the width of the HP-TRMs.
3. Roll the HP-TRMs (A) down or (B) horizontally across the slope. HP-TRMs will unroll with appropriate side against the soil surface. All HP-TRMs must be securely fastened to soil surface by placing staples/anchors in appropriate locations as shown in the staple pattern guide.
4. The edges of parallel HP-TRMs must be stapled between earth anchors with approximately 4" (10 cm) overlap depending on the HP-TRM type. For curved sections, adjust the overlap edges of parallel HP-TRMs accordingly with a minimum of 4" (10 cm) overlap to accommodate transitional segments.

*NOTE:
In loose soil conditions, the use of staple or stake lengths greater than 6"(15cm) may be necessary to properly secure the HP-TRMs.

Drawing Not To Scale

Tensar. NORTH AMERICAN GREEN®
5401 St. Wendel - Cynthiana Rd. PH: 800-772-2040
Poseyville, IN 47633 www.tensarnagreen.com

Drawn on: 01-28-13

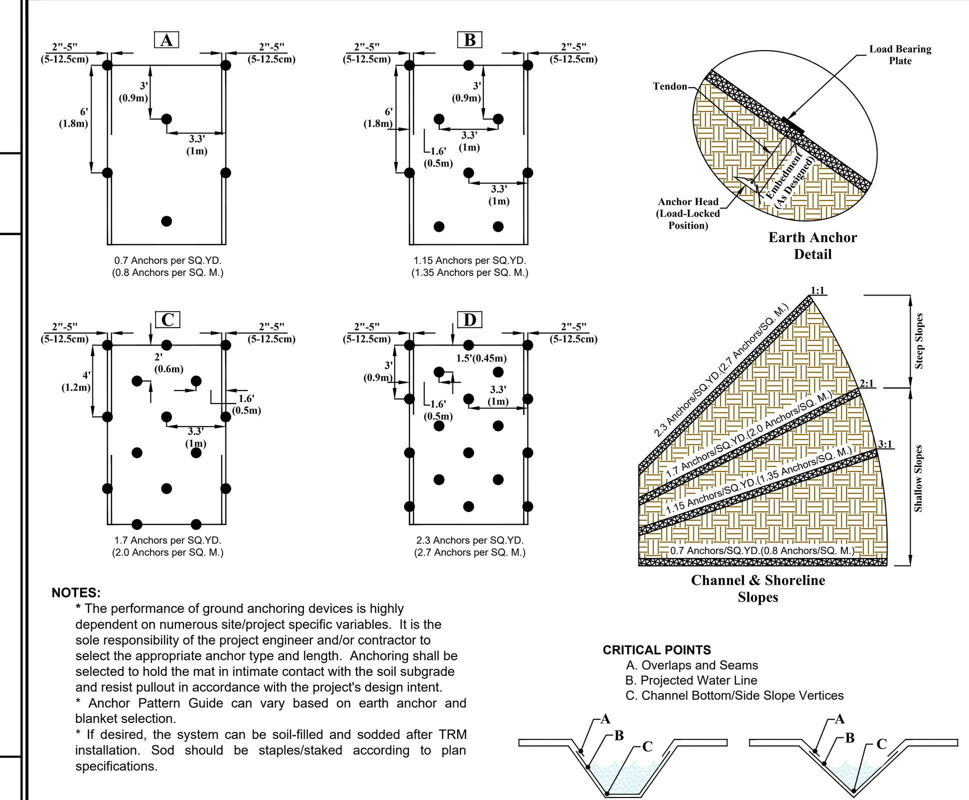

NOTES:
* The performance of ground anchoring devices is highly dependent on numerous site/project specific variables. It is the sole responsibility of the project engineer and/or contractor to select the appropriate anchor type and length. Anchoring shall be selected to hold the mat in intimate contact with the soil subgrade and resist pullout in accordance with the project's design intent.
* Anchor Pattern Guide can vary based on earth anchor and blanket selection.
* If desired, the system can be soil-filled and sodded after TRM installation. Sod should be staples/staked according to plan specifications.

CRITICAL POINTS
A. Overlaps and Seams
B. Projected Water Line
C. Channel Bottom/Side Slope Vertices

SLOPE INSTALLATION EARTH ANCHOR (EA) DETAIL

1. Prepare soil before installing high-performance turf reinforcement mats (HP-TRMs), including any necessary application of lime, fertilizer, and seed.
2. Begin at the top of the slope by anchoring the HP-TRMs in a 6" (15 cm) deep x 6" (15cm) wide trench with approximately 12" (30 cm) of HP-TRMs extended beyond the up-slope portion of the trench. Anchor the HP-TRMs with a row of staples and anchors approximately 12" (30 cm) apart in the bottom of the trench. Backfill and compact the trench after stapling. Apply seed to compacted soil and fold remaining 12" (30 cm) portion of HP-TRMs back over seed and compacted soil. Secure HP-TRMs over compacted soil with a row of staples/stakes spaced approximately 12" (30 cm) apart across the width of the HP-TRMs.
3. Roll the HP-TRMs (A) down or (B) horizontally across the slope. HP-TRMs will unroll with appropriate side against the soil surface. All HP-TRMs must be securely fastened to soil surface by placing staples/stakes in appropriate locations as shown in the staple pattern guide.
4. The edges of parallel HP-TRMs must be stapled with approximately 2" - 5" (5-12.5cm) overlap depending on the HP-TRM type.
5. Consecutive HP-TRMs spliced down the slope must be end over end (Shingle style) with an approximate 3"(7.5cm) overlap. Staple through overlapped area, approximately 12"(30cm) apart across entire HP-TRM width.

*NOTE:
In loose soil conditions, the use of staple or stake lengths greater than 6"(15cm) may be necessary to properly secure the HP-TRMs.

Drawing Not To Scale

Tensar. NORTH AMERICAN GREEN®
5401 St. Wendel - Cynthiana Rd. PH: 800-772-2040
Poseyville, IN 47633 www.tensarnagreen.com

Disclaimer:
The information presented herein is general design information only. For specific applications, consult an independent professional for further design guidance.

Drawn on: 01-28-13

E-8 **EROSION BLANKET SLOPE STABILIZATION DETAIL**
NOT TO SCALE

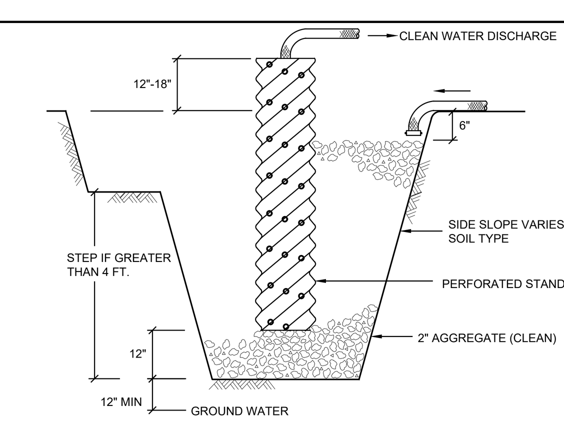

INSTALLATION NOTES:
1. Pit dimensions are variable.
2. The standpipe should be a perforated 12" to 24" diameter corrugated metal, PVC or HDPE pipe.
3. A base of 2" clean aggregate should be placed in the pit to a depth of 12". After installing the standpipe, the pit surrounding the standpipe should then be backfilled with 2" aggregate.
4. The standpipe should extend 12" - 18" above the lip of the pit.
5. If discharge will be pumped directly to a storm drainage system, the standpipe should be wrapped with filter fabric before installation. If desired, 1/4" - 1/2" hardware cloth may be placed around the standpipe, prior to attaching the filter fabric, this will increase the rate of water seepage into the pipe.

E-9 **DEWATERING PIT DETAIL**
NOT TO SCALE

SAFE DIG
Before You Dig, Drill or Blast!
CALL US TOLL FREE 811 or 1-800-962-7962
NY Industrial Code Rule 753 requires no less than two working days notice, but not more than ten days notice.
www.digsafelynewyork.com

F:\2023\23-18 AMS - E MAIN STREET, YORKTOWN\ENGINEERING\CAD\C3D-23-18 AMS MAIN STREET YORKTOWN\23-18 AMS DETAILS.DWG 1/16/2017 3:19:52 PM

NOTE: UNAUTHORIZED ALTERATIONS OR ADDITIONS TO THIS DRAWING IS A VIOLATION OF SECTION 7209 (2) OF THE NEW YORK STATE EDUCATION LAW.

Site Design Consultants
Civil Engineers • Land Planners
251-F Underhill Avenue, Yorktown Heights, NY 10598
(914) 962-4488 - Fax: (914) 962-7386
www.sitedesignconsultants.com

PROJECT # 23-18

Engineer:
STATE OF NEW YORK · JOSEPH CARLO RIINA · NO. 64431 · LICENSED PROFESSIONAL ENGINEER
Joseph C. Riina, P.E.
NYS Lic. No. 64431

COPYRIGHT © 2025 BY SITE DESIGN CONSULTANTS, ALL RIGHTS RESERVED

Revisions:		
No.	Date	Comments:

Revisions:		
No.	Date	Comments:

SCALE:
DRAWN BY: AKM
DATE: 06/18/25

E&SC DETAILS

SITE PLAN
PREPARED FOR
AMS YORKTOWN ACTIVE ADULT COMMUNITY
Town of Yorktown 800 EAST MAIN STREET Westchester County, NY

Sheet C-201

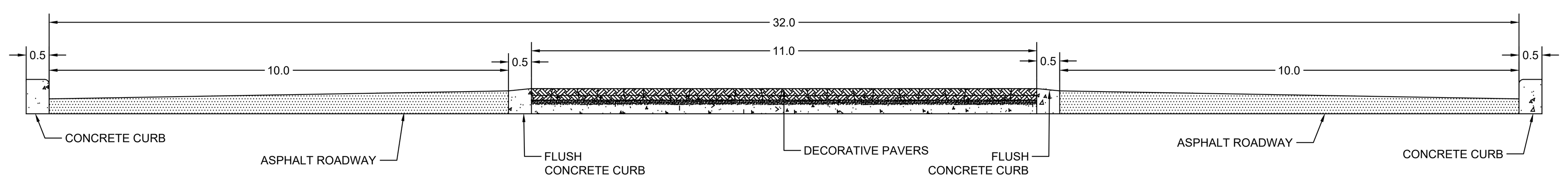

ENTRANCE DRIVE EMERGENCY
ACCESS MEDIAN SECTION VIEW
SCALE : 1"=2'

R-1 ENTRANCE DRIVE SECTION

SCALE: 1"=2'

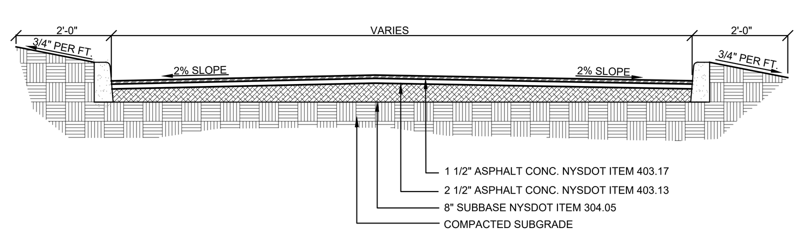

R-2 TYPICAL DRIVEWAY AND PARKING LOT SECTION

NOT TO SCALE

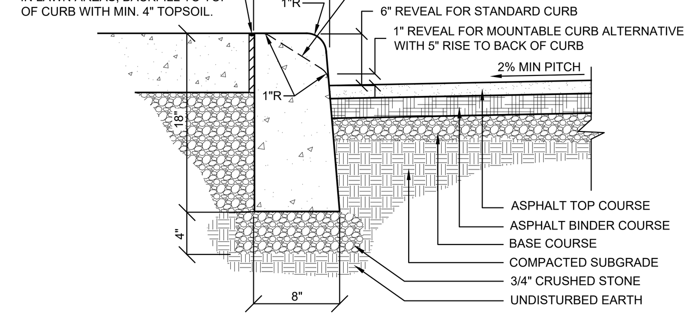

NOTE:
1. Provide 1/2" expansion joint in concrete curb every ten feet. Construct curb with class a concrete (3000 psi).
2. Mountable curb alternative shall be installed at locations shown on the plan.
3. Transition from standard to mountable curb sections shall be smooth and tapered.

R-3 STANDARD AND MOUNTABLE CONCRETE CURB DETAIL

NOT TO SCALE

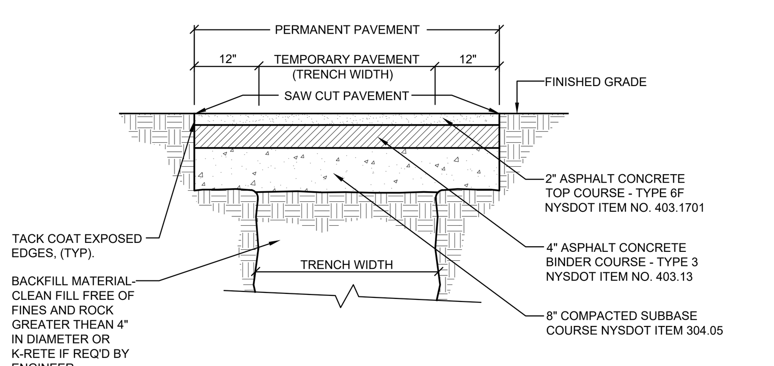

NOTE:
1. Pavement layer thickness shown are minimum values and shall match existing if greater.

R-4 PAVEMENT REPLACEMENT DETAIL

NOT TO SCALE

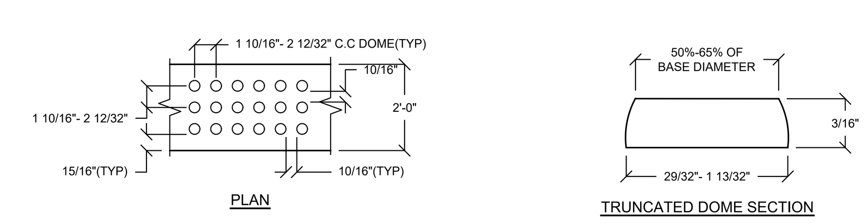

NOTES:

GENERAL:
1. Sidewalk curb ramp type and location are as shown on the plans or as directed.
2. All sidewalk curb ramp types may be used as straight or curved curb sections.
3. Sidewalk curb ramp types may be different at each location within an intersection.

SIDEWALK CURB RAMP CRITERIA:
4. The maximum slope of a sidewalk curb ramp shall be 1:12.
5. The maximum width of a sidewalk curb ramp shall be five feet. Exclusive of flared sides.
6. All sidewalk curb ramps shall have flush, smooth transitions to the adjacent street or highway surface.

SURFACE FINISH:
7. The surface of all sidewalk curb ramps shall be stable, firm, and slip resistant (E.G. A coarse broom finish perpendicular to the ramp slope is acceptable on cement concrete curb ramps.)
8. All proposed sidewalk curb ramps shall have a detectable warning surface installed from the back of the curb for a distance of 2 feet in the direction of travel on the ramp and extending the full width of the ramp, excluding the ramp sides or flares. The detectable warning surface shall comply with the requirements of section 4.29.2 of the Americans with Disabilities Act accessibility guidelines (ADAAG).

SIDEWALK CURB RAMP PLACEMENT:
9. At a corner, where the curb radius is 25-feet or less, a single ramp (either type a or b) located diagonally can often serve crosswalks in two directions. However, a single ramp shall only be used where there is a minimum clear space of 48" falling entirely within the projection of the intersection curbs (see figure 1). Where the radius exceeds 25' or the minimum 48" clear space is not achievable, then separate ramps should be provided for each crosswalk.

PAVEMENT MARKINGS AT CROSSWALKS:
10. Sidewalk curb ramps at marked crossings shall be wholly contained within the markings excluding any flared sides.
11. At a corner where a single ramp (either type a or b; located diagonally serves two crosswalks, this shall be a 48" minimum clear space at the ramp bottom wholly contained within the intersection crosswalk markings (see figure 1).
12. Where stop lines are necessary, they shall be located in advance of sidewalk curb ramps.

UTILITIES - DRAINAGE INLETS OR GRATES:
13. Where feasible, provide for drainage inlets or grates immediately upstream from the curb ramps. Reticuline or rectangular drainage grates are to be used in the area of curb ramps.
14. Do not place signal poles, sign posts, utility poles, fire hydrants, etc., within the ramp or side flare areas.

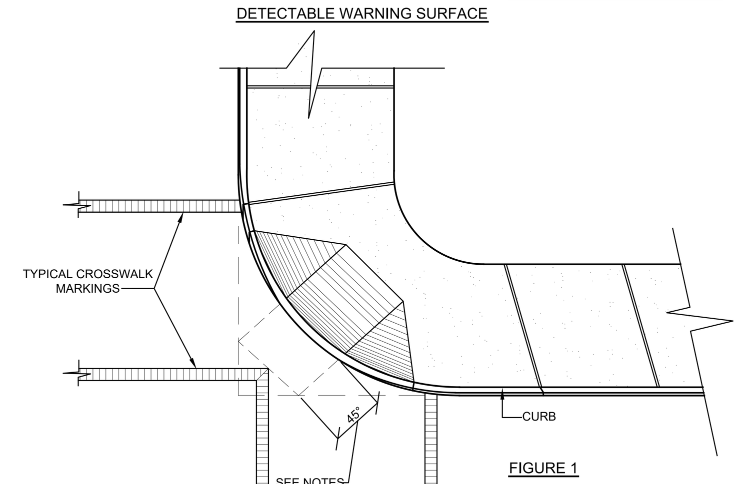

FIGURE 1

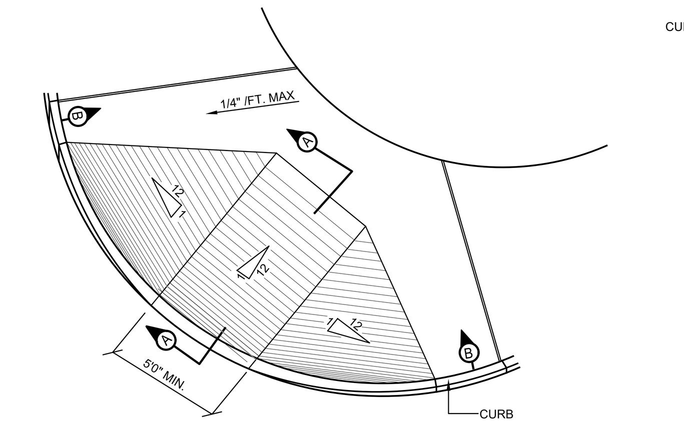

CURB SIDEWALK RAMP TYPE "A"

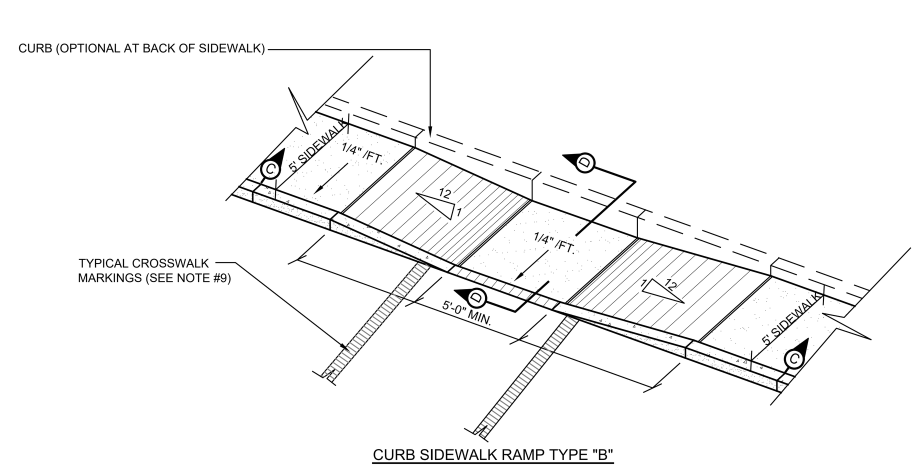

CURB SIDEWALK RAMP TYPE "B"

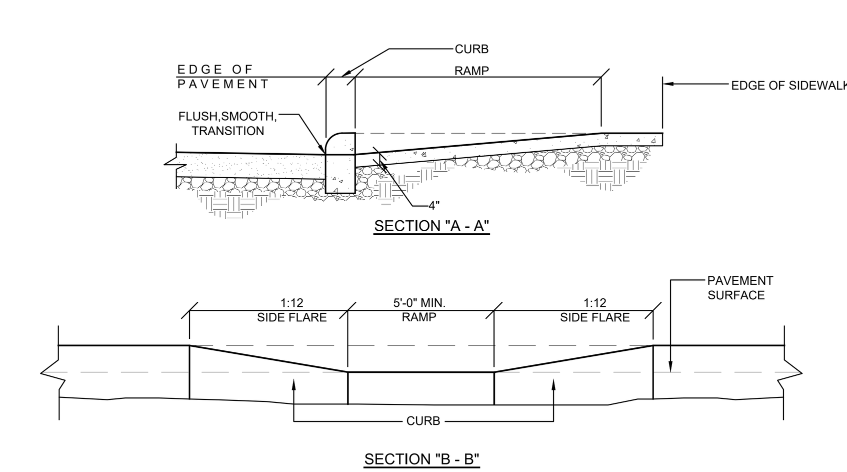

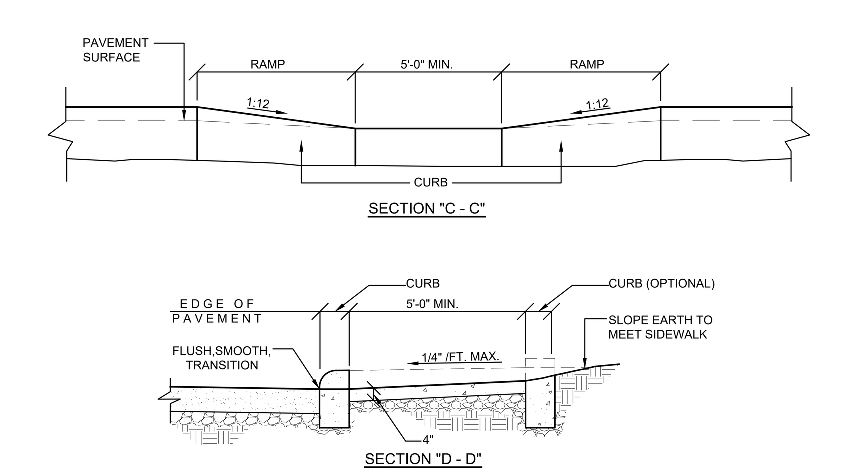

R-6 SIDEWALK CURB-RAMP DETAIL

NOT TO SCALE

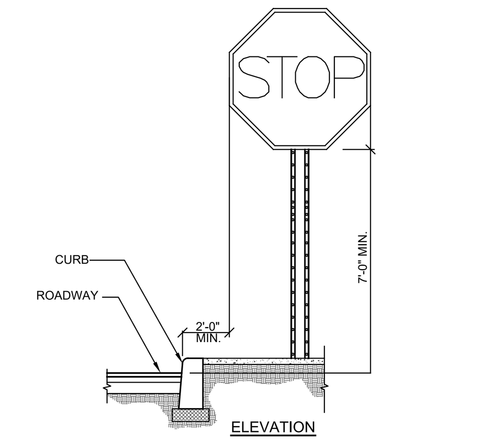

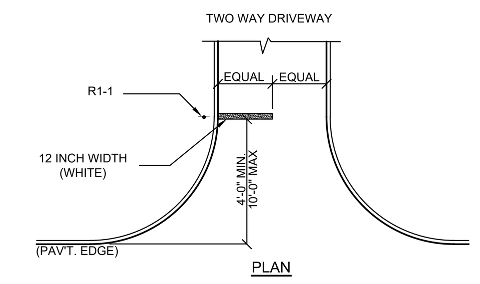

SYMBOL	DESCRIPTION
GR. MT. OH MT. BR MT. B/B	GROUND MOUNTED OVERHEAD MOUNTED BRIDGE MOUNTED BACK TO BACK
┼ OR ⌽	APPROXIMATE LOCATION OF SIGN

TYPICAL INSTALLATION GUIDELINES

SIGN	M.U.T.C.D. NUMBER	SIZE OF SIGN	TYPE OF MOUNT
STOP	R1-1	30" X 30"	GR. MT.
NO PARKING ANY TIME ⟷	P1-2 (SEE NOTE 4)	12" X 18"	GR. MT.
RESERVED PARKING ♿ ⟷	R7-8	12" X 18"	GR. MT.

GENERAL NOTES:
1. All signage shall be in accordance with the latest edition of the national MUTCD and the N.Y.S Supplement (MUTCD), September 2007, including the following:
   A. Letter size and series
   B. Legend and background color
   C. Reflectivity
   D. Size of sign
2. The type of characters as specified in the standard specifications shall be as follows:

MUTCD CODE LETTER	TYPE OF CHARACTER
G.I.	TYPE IV
R.P.W.M.	TYPE IV OR V.

3. Sign locations as shown on plans are approximate. The Contractor shall relocate existing signs and install new signs in accordance with the MUTCD, latest edition. The Contractor shall contact the Town Engineer to discuss/resolve problem areas.
4. Except where otherwise specified, parking signs shall be placed facing approaching traffic at an angle of between 30 and 45 degrees with the line of traffic flow. Parking signs shall be placed at each end of a regulation (single-headed arrows) and, within the regulation (double-headed arrows), at intervals not to exceed 200 ft
5. Where new signs are installed the Contractor shall affix a label to the back of the sign panel. This label will show the date of installation and identification numbers.
6. Placement of W3-17 sign is prescribed in the General Municipal Law.

R-7 TRAFFIC SIGN DETAIL

NOT TO SCALE

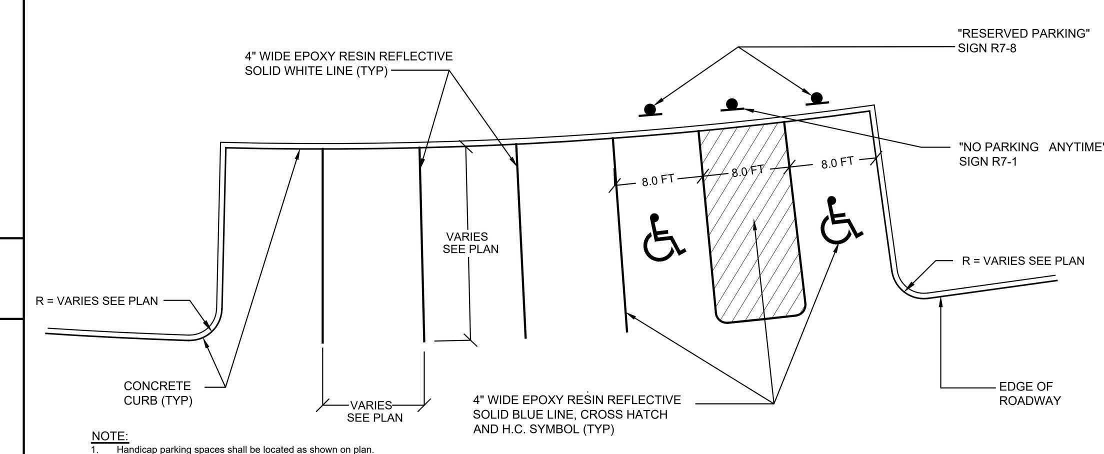

NOTE:
1. Handicap parking spaces shall be located as shown on plan.

R-8 TYPICAL PARKING STALL LAYOUT

NOT TO SCALE

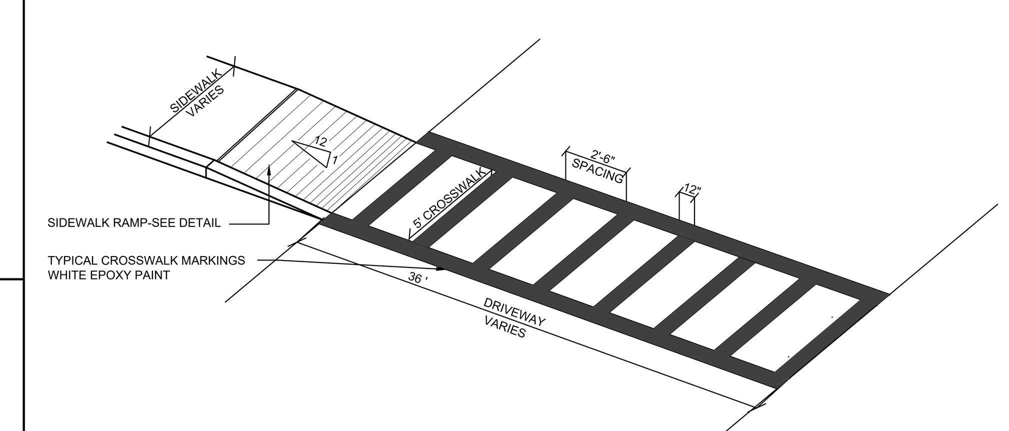

R-9 PAINTED CROSS WALK

NOT TO SCALE

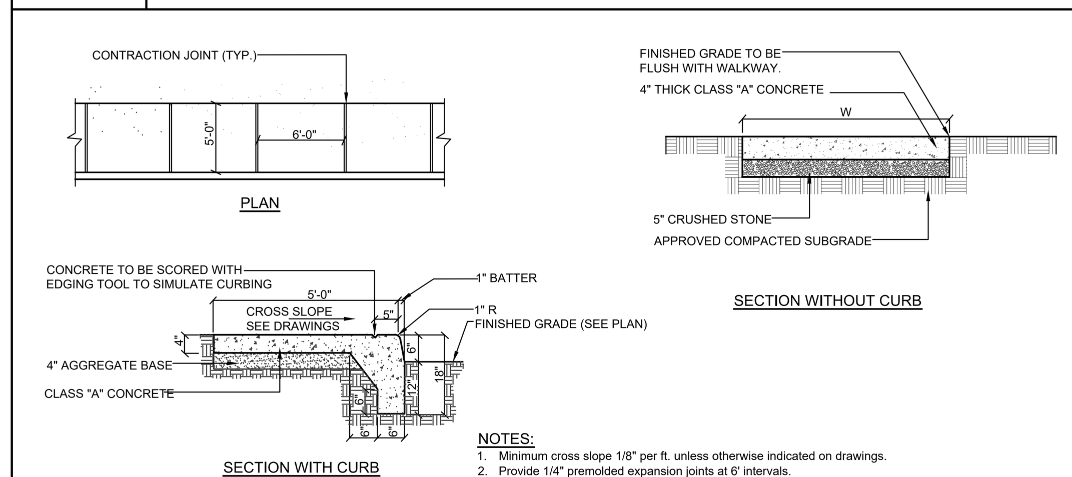

NOTES:
1. Minimum cross slope 1/8" per ft. unless otherwise indicated on drawings.
2. Provide 1/4" premolded expansion joints at 6' intervals.
3. At the juncture of driveways and sidewalks, one-half (1/2") inch, premolded bituminous joints shall be installed

R-10 CONCRETE CURB & SIDEWALK DETAIL

NOT TO SCALE

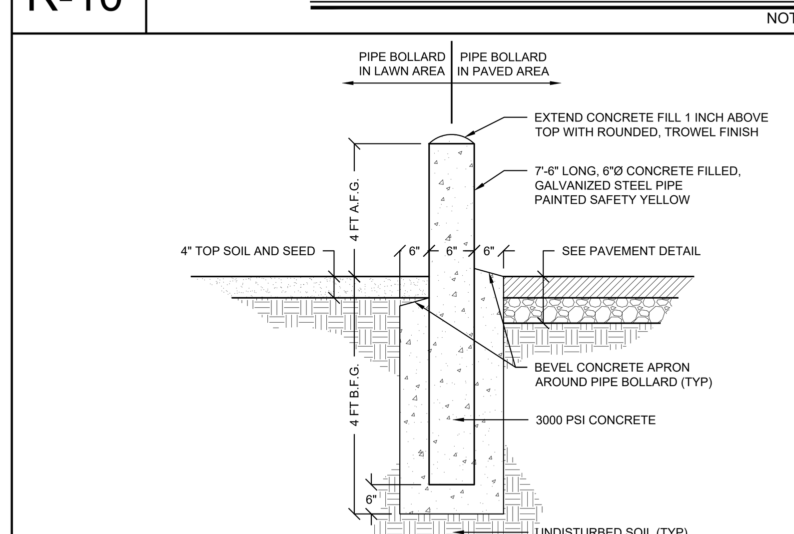

NOTE:
1. Pipe bollards shall be installed at locations shown on the plan.
2. In no case shall bollards be placed in such a way as to hinder the proper access, maintenance and operation of the structure, utility or other feature intended to be protected.
3. Contractor shall coordinate placement of bollards at fire hydrants with the local Fire or Water Department as appropriate.

R-14 PIPE BOLLARD DETAIL

NOT TO SCALE

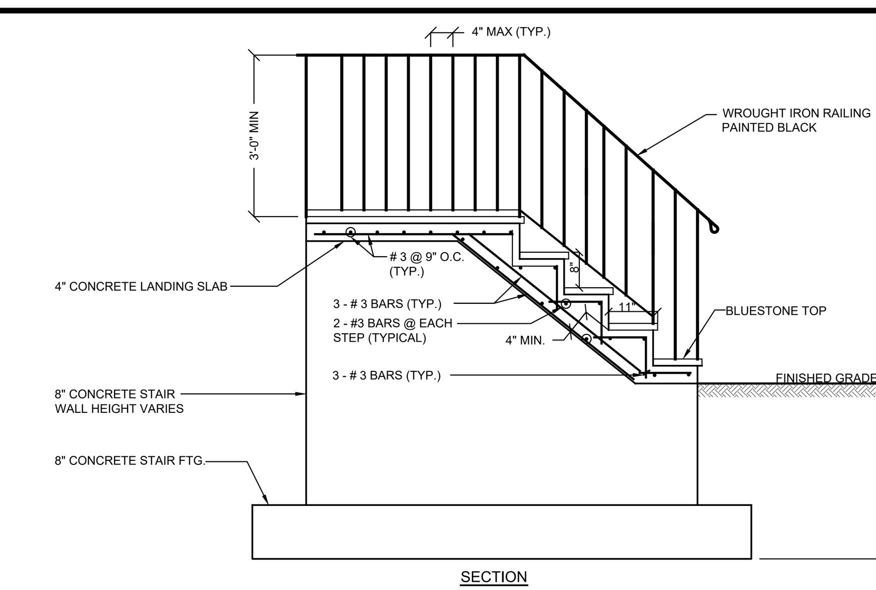

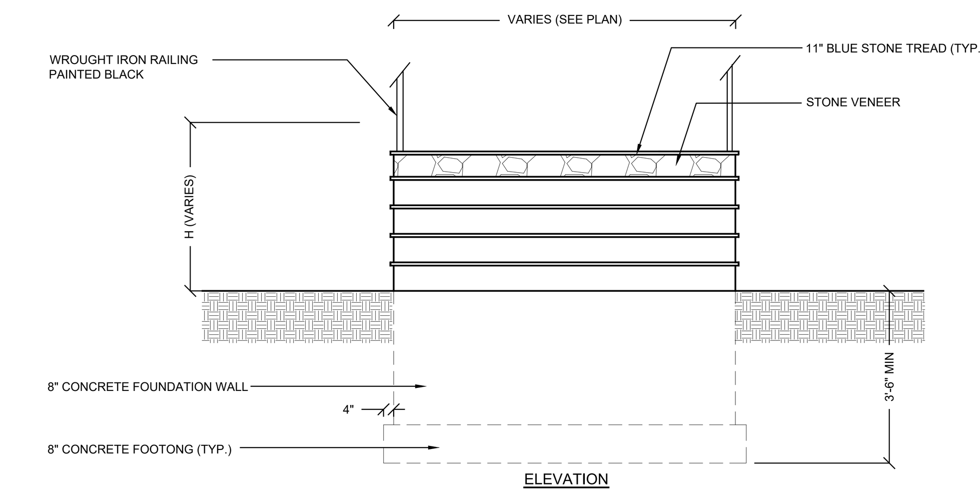

NOTES:
1. Typical detail does not show the actual number of risers and treads required.
2. Blue stone tread shall be set in mortar.
3. All stairs shall be backfilled with crushed stone.

ST-X CONCRETE STAIR DETAIL

NOT TO SCALE

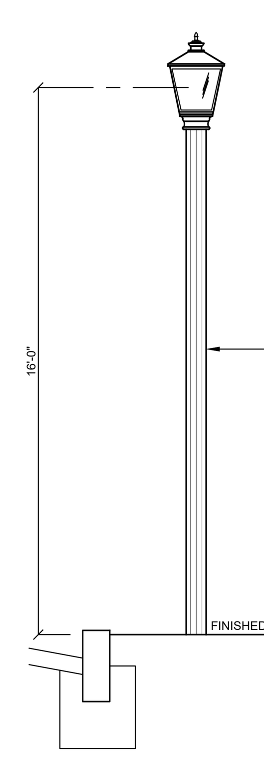

LIGHT STANDARD ELEVATION

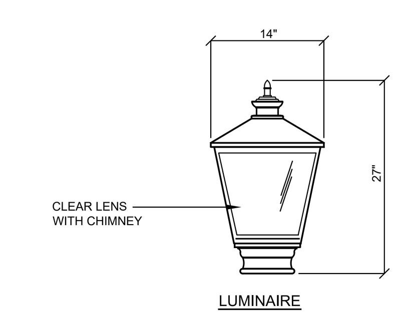

LUMINAIRE

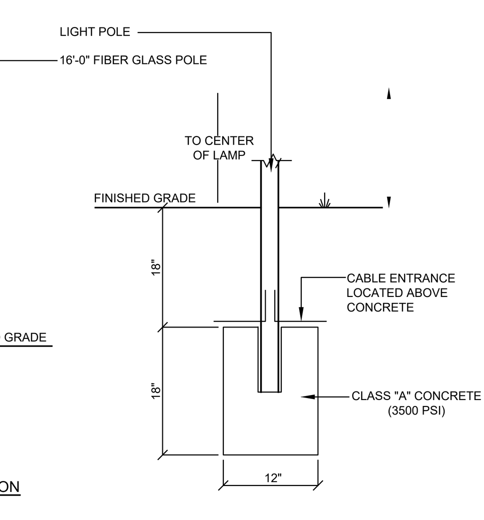

ORNAMENTAL POLE BASE

R-13 STREET LIGHT DETAIL

NOT TO SCALE

SAFE DIG
Before You Dig, Drill or Blast!
CALL US TOLL FREE 811 or 1-800-962-7962
NY Industrial Code Rule 753 requires no less than two working days notice, but not more than ten days notice.
www.digsafelynewyork.com

NOTE: UNAUTHORIZED ALTERATIONS OR ADDITIONS TO THIS DRAWING IS A VIOLATION OF SECTION 7209 (2) OF THE NEW YORK STATE EDUCATION LAW.

F:\2023\23-18 AMS - E MAIN STREET, YORKTOWN\ENGINEERING\CAD\C3D-23-18 AMS MAIN STREET YORKTOWN\23-18 AMS DETAILS.DWG 1/16/2017 3:19:52 PM

PROJECT # 23-18

COPYRIGHT © 2025 BY SITE DESIGN CONSULTANTS, ALL RIGHTS RESERVED

Site Design Consultants
Civil Engineers • Land Planners
251-F Underhill Avenue, Yorktown Heights, NY 10598
(914) 962-4488 - Fax: (914) 962-7386
www.sitedesignconsultants.com

Engineer:

Joseph C. Riina, P.E.
NYS Lic. No. 64431

Revisions: No.	Date	Comments:

Revisions: No.	Date	Comments:

SCALE:

DRAWN BY: AKM

DATE: 06/18/25

SITE DETAILS

SITE PLAN
PREPARED FOR
AMS YORKTOWN ACTIVE ADULT COMMUNITY

Town of Yorktown 800 EAST MAIN STREET Westchester County, NY

Sheet C-202

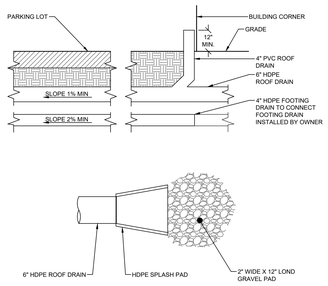

FOOTING DRAIN SPLASH PAD

D-1 ROOF & FOOTING DRAIN CONNECTION DETAIL

NOT TO SCALE

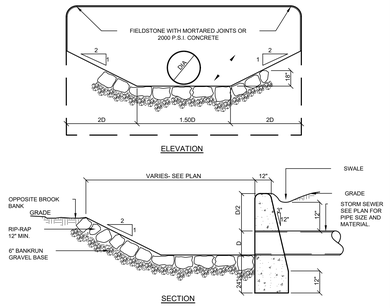

NOTE:
1. At least 50% of stone shall weigh in excess of 300lbs. and the remainder shall weigh between 150lbs. and 300lbs.; the minimum dimension of any stone is 12".

D-2 FIELDSTONE HEADWALL DETAIL

NOT TO SCALE

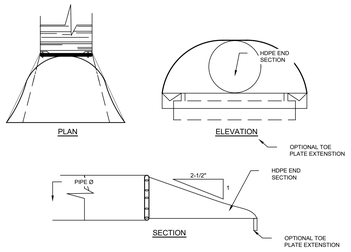

NOTE:
1. HDPE END SECTION SHALL BE FITTED AND FASTENED TO PROPOSED PIPE AS PER MANUFACTURER RECOMMENDATIONS.

D-3 HDPE PIPE END SECTION DETAIL

NOT TO SCALE

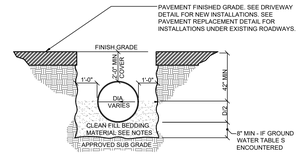

NOTES:
1. Pipe shall be laid and connected in the bedding which shall consist of:
   A. Compacted existing subsoil when laid above ground water or;
   B. 3/4" crushed stone when laid below ground water.
2. If subsoil is determined to be unsuitable by the Engineer, all unsuitable material shall be removed for at least 2'-6" below the pipe invert or twice the pipe diameter, whichever is greater, and replaced with compacted bedding material.

D-4 STORM PIPE BEDDING DETAIL

NOT TO SCALE

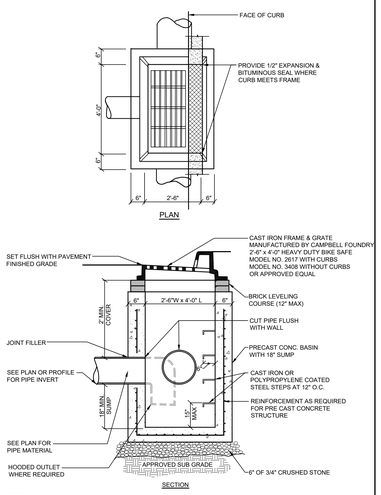

NOTES:
1. Where depth of catch basin exceeds 10 ft, inside dimensions shall be 48" x 48".
2. Catch basin covers and structures shall meet or exceed A.S.T.M. and O.S.H.A. requirements.
3. Pre-cast sections shall be in accordance with "Pre-cast Reinforced Manhole Sections", A.S.T.M. Designation C-478, latest revision. Minimum compressive strength shall be 4000 psi. Structures shall be rated for H-20 vehicle loading.

D-5 TYPICAL CATCH BASIN DETAIL

NOT TO SCALE

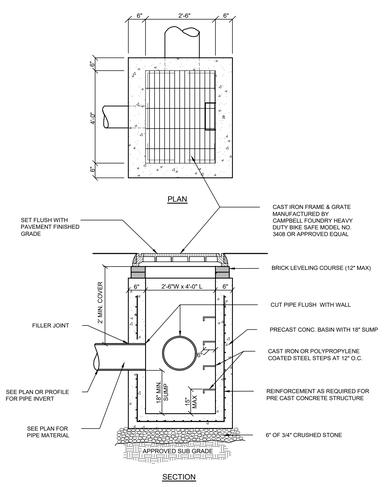

NOTES:
1. Where depth of catch basin exceeds 10 ft, inside dimensions shall be 48" x 48".
2. Top of basin shall be built with precast concrete structural slab designed for H-20 loading.

D-6 PRECAST CATCH BASIN - NO CURB DETAIL

NOT TO SCALE

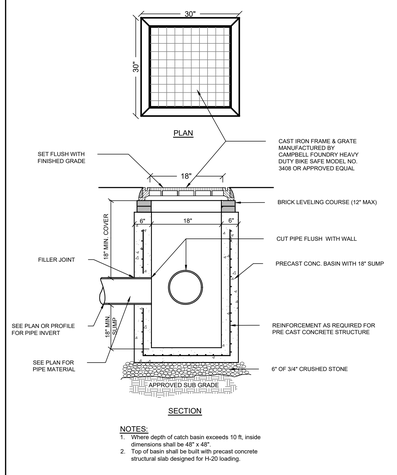

NOTES:
1. Where depth of catch basin exceeds 10 ft, inside dimensions shall be 48" x 48".
2. Top of basin shall be built with precast concrete structural slab designed for H-20 loading.

D-7 DRAIN INLET CATCH BASIN

NOT TO SCALE

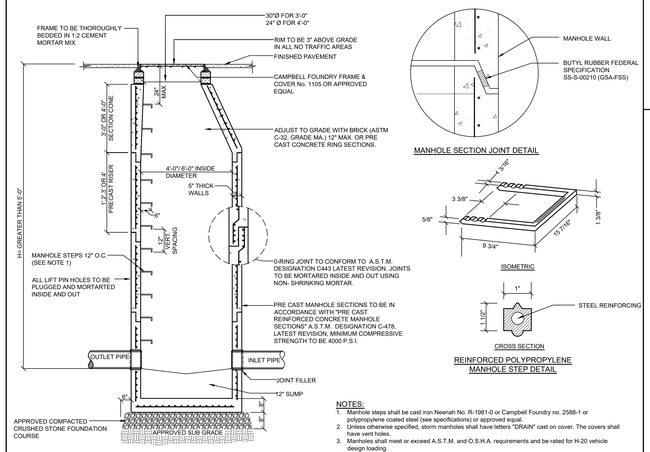

NOTES:
1. Manhole steps shall be cast iron Neenah No. R-1981-0 or Campbell Foundry no. 2588-1 or polypropylene coated steel (see specifications) or approved equal.
2. Unless otherwise specified, storm manholes shall have letters "DRAIN" cast on cover. The covers shall have vent holes.
3. Manholes shall meet or exceed A.S.T.M. and O.S.H.A. requirements and be rated for H-20 vehicle design loading.
4. All pipes shall be cut flush with inside walls.
5. Where depth of manhole exceeds 10 ft, inside diameter shall be 60 ".

D-8 PRECAST CONCRETE STORM DRAIN MANHOLE DETAIL

NOT TO SCALE

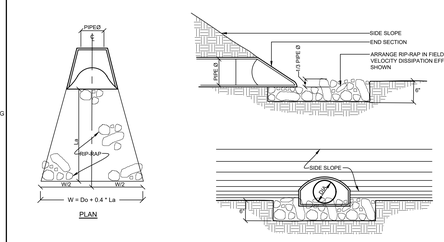

D-9 RIP-RAP APRON/ENERGY DISSIPATOR DETAIL

NOT TO SCALE

SAFE DIG
Before You Dig, Drill or Blast!
Call 811 Call 811 Call 811 CALL 1-800-962-7962 CT Law requires Code Rule 753 requires no less than two working days notice, but not more than ten working days. www.digsafelyconnecticut.com www.digsafelynewyork.com

Sheet C-203

NOTE: UNAUTHORIZED ALTERATIONS OR ADDITIONS TO THIS DRAWING IS A VIOLATION OF SECTION 7209 (2) OF THE NEW YORK STATE EDUCATION LAW.

F:\2023\23-18 AMS - E MAIN STREET, YORKTOWN\ENGINEERING\CADD\23-18 AMS MAIN STREET YORKTOWN\23-18 AMS DETAILS.DWG 11/20/2017 3:15:53 PM

PROJECT # 23-18

Site Design Consultants
Civil Engineers • Land Planners
251-F Underhill Avenue, Yorktown Heights, NY 10598
(914) 962-4488 - Fax: (914) 962-7386
www.sitedesignconsultants.com

COPYRIGHT © 2005 BY SITE DESIGN CONSULTANTS, ALL RIGHTS RESERVED

STATE OF NEW YORK · JOSEPH C. KIMA · No. 075143 · LICENSED PROFESSIONAL ENGINEER
Engineer: Joseph C. Kima, P.E.
STATE OF CONNECTICUT

Revisions:		
No.	Date	Comments:

Revisions:		
No.	Date	Comments:

SCALE:
DRAWN BY: AKM
DATE: 06/18/25

DRAINAGE DETAILS

SITE PLAN
PREPARED FOR
AMS YORKTOWN ACTIVE ADULT COMMUNITY
800 EAST MAIN STREET
Town of Yorktown
Westchester County, NY

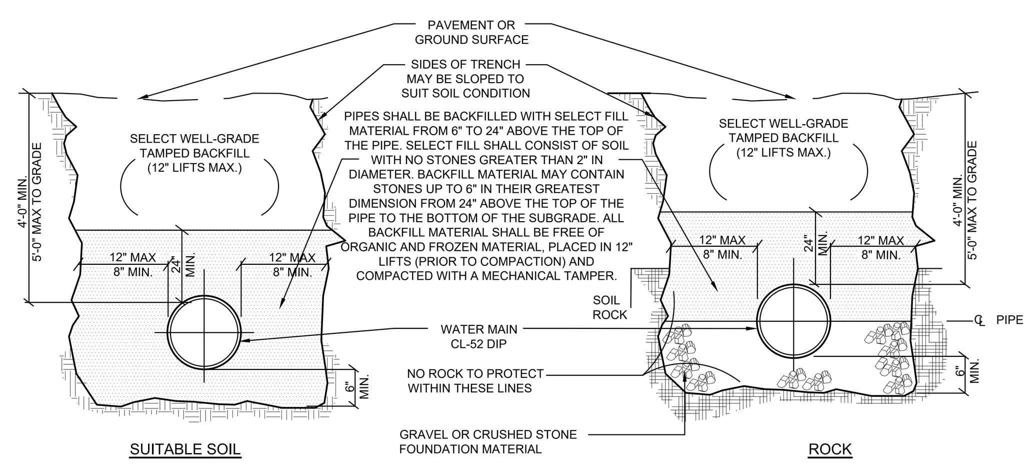

NOTES:
1. In materials to be considered as unsuitable (i.e. Muck) material is to be replaced 24" below the pipe invert and replaced with item no. 4 bedding.
2. A continuous and uniform bedding shall be provided in the trench for all buried pipe. Backfill material shall be tamped in layers around the pipe and to a sufficient height above the pipe to adequately support and protect the pipe. Stones found in the trench shall be removed for a depth of at least six inches below the bottom of the pipe.
3. See Pavement Replacement Detail for backfill specifications in local and main TOWN roads.

W-1 WATER MAIN BEDDING DETAIL

NOT TO SCALE

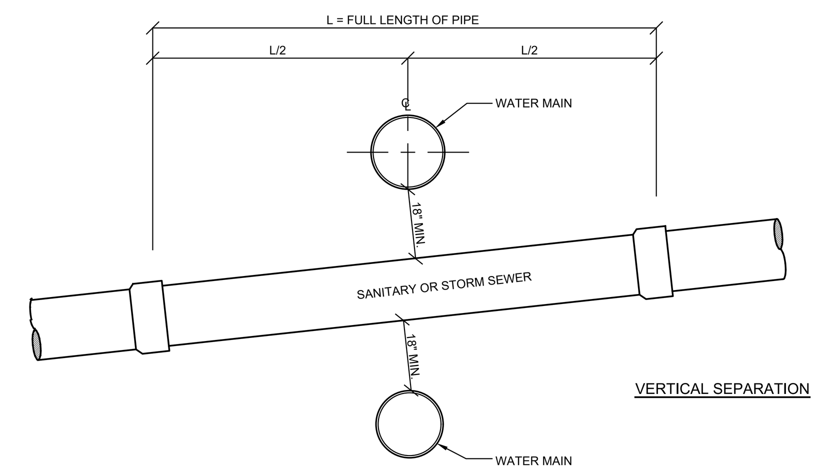

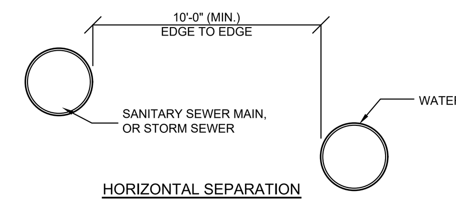

NOTES:
1. WHERE THE SANITARY SEWER MAIN CROSSES THE WATER MAIN AN 18" MINIMUM VERTICAL SEPARATION SHALL BE MAINTAINED. THE DISTANCE SHALL BE MEASURED EDGE TO EDGE.
2. WHERE THE SANITARY SEWER MAIN RUNS PARALLEL TO AN EXISTING OR PROPOSED WATER MAIN A 10' MINIMUM HORIZONTAL SEPARATION SHALL BE MAINTAINED. THE DISTANCE SHALL BE MEASURED EDGE TO EDGE.
3. ANY DEVIATION FROM THE REQUIRED MINIMUM SEPARATIONS SHALL BE SUBJECT TO A REVIEW AND APPROVAL BY THE WESTCHESTER COUNTY DEPARTMENT OF HEALTH PRIOR TO CONSTRUCTION.

W-4 SEPARATION OF WATER MAINS, SANITARY SEWERS OR STORM SEWERS

NOT TO SCALE

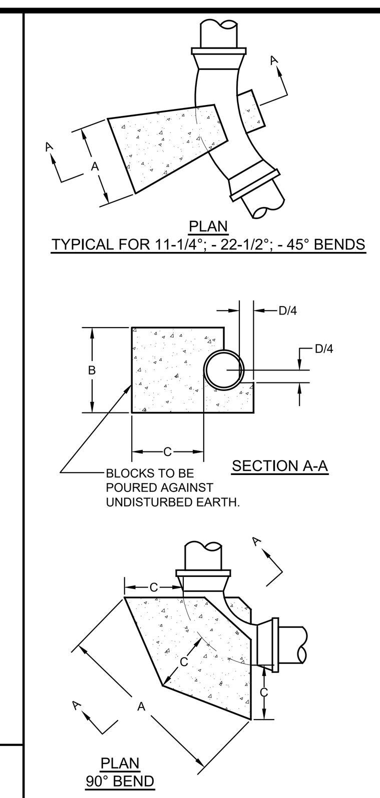

PIPE DIAM. IN.	BEND	BLOCK DIMENSIONS A IN.	B IN.	C IN.	CONCRETE VOLUME FT.³
16	90	80	32	32	39.5
	45	48	28	30	19.7
	22.5	30	22	26	10.0
	11.25	20	18	12	3.8
12	90	56	26	20	15.0
	45	38	22	10	7.7
	22.5	20	20	12	3.6
	11.25	18	18	12	3.0
10	90	48	22	16	8.9
	45	28	20	12	4.0
	22.5	18	18	12	2.7
	11.25	16	16	12	2.2
8	90	34	20	12	4.4
	45	20	18	12	2.5
	22.5	14	14	12	1.6
	11.25				(3)
6	90	24	16	12	2.5
	45	14	14	12	1.5
	22.5	12	12	12	1.2
	11.25				(3)

NOTES:
1. Min. 2,500 psi concrete to be used.
2. Block dimensions are minimum and are based upon soil bearing pressure of 2,000 psf and water pressure of 150 psi. Where soil bearing is less or water pressure is greater, a special design will be required.
3. All bolts shall be covered with burlap before pouring concrete.
4. Bend to be set against disturbed earth, backfill to be firmly tamped, or block to be furnished as directed by the engineer.

W-8 THRUST BLOCKING FOR HORIZONTAL BENDS

NOT TO SCALE

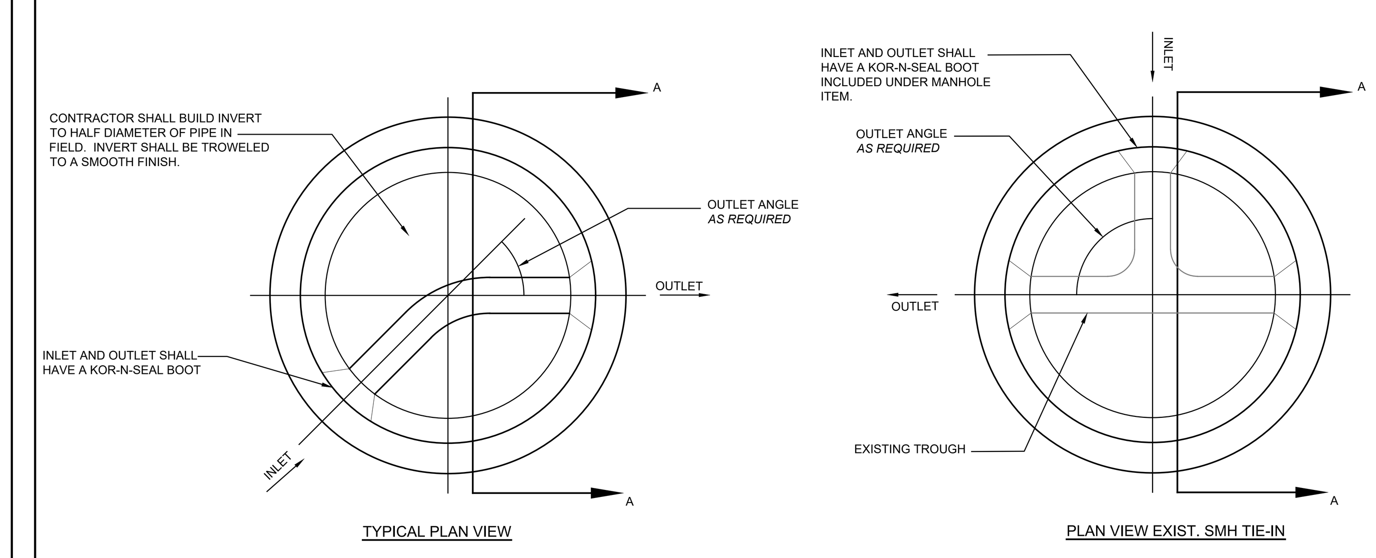

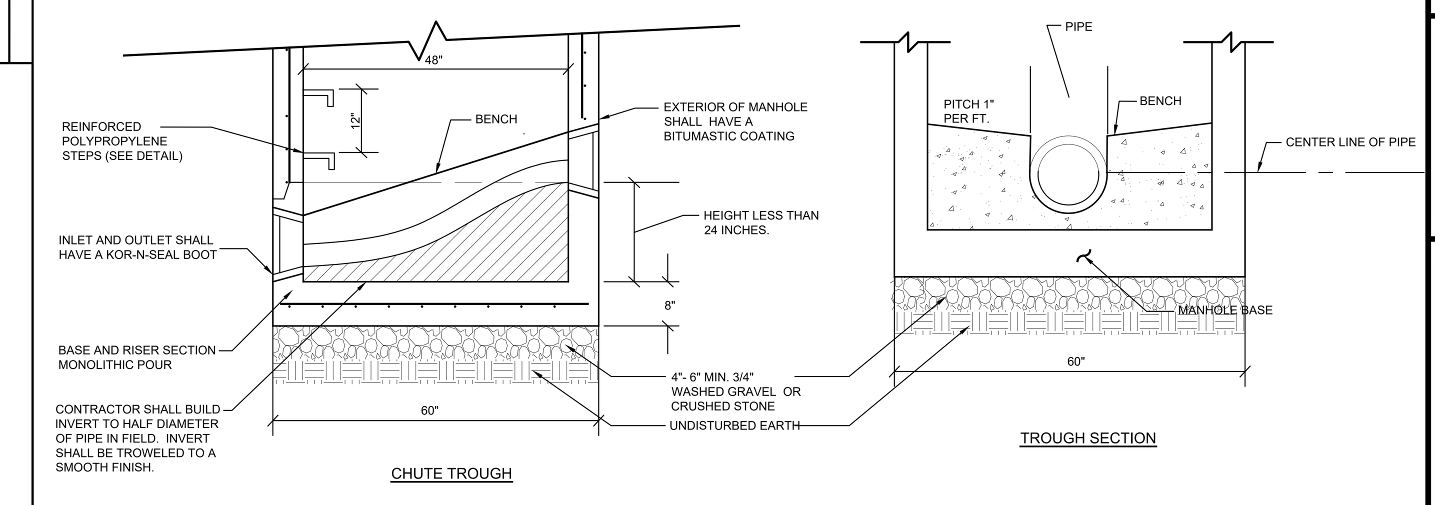

S-5 TYPICAL DETAIL OF TIE-IN TO EXISTING SEWER MANHOLE

NOT TO SCALE

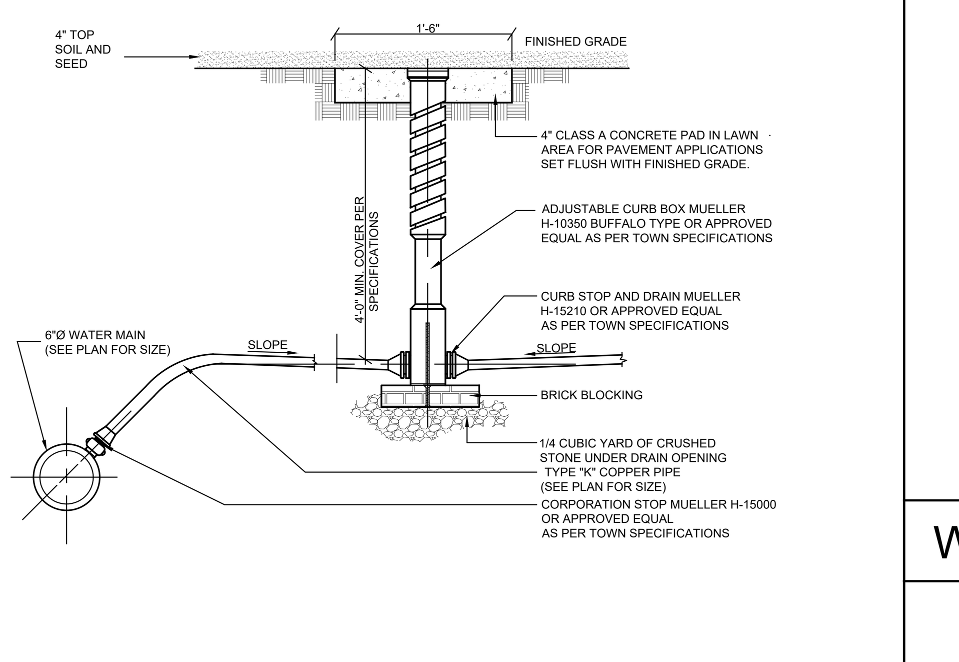

W-2 WATER SERVICE CONNECTION DETAIL

NOT TO SCALE

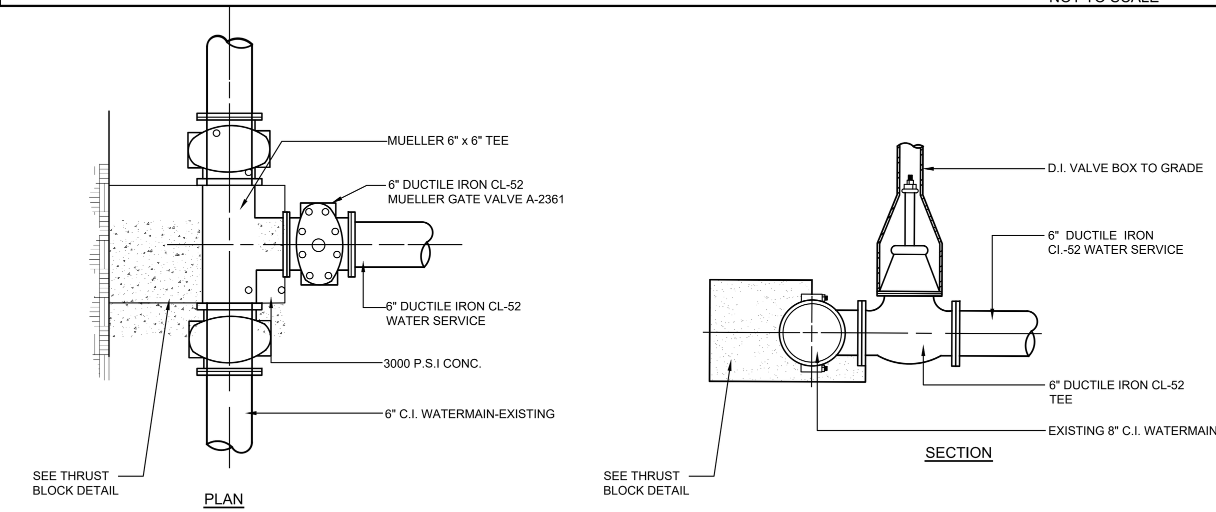

W-5 TEE AND GATE VALVE CONNECTION DETAIL

NOT TO SCALE

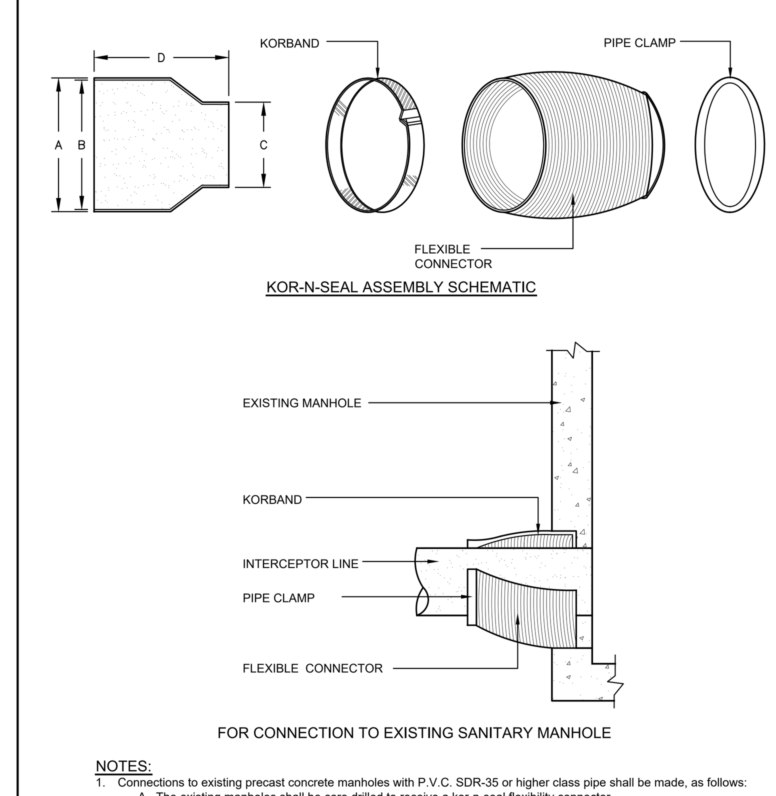

NOTES:
1. Connections to existing precast concrete manholes with P.V.C. SDR-35 or higher class pipe shall be made, as follows:
   A. The existing manholes shall be core drilled to receive a kor-n-seal flexibility connector.
   B. The opening shall be cleaned and the connector set in place with the korband using a hydraulic lift.
   C. The contractor may substitute another system for one described provided that a seal of the same reliability is maintained with the manhole. The pipe clamps and all devices, including screws, shall be stainless steel.

S-1 EXISTING SANITARY FLEXIBLE CONNECTION

NOT TO SCALE

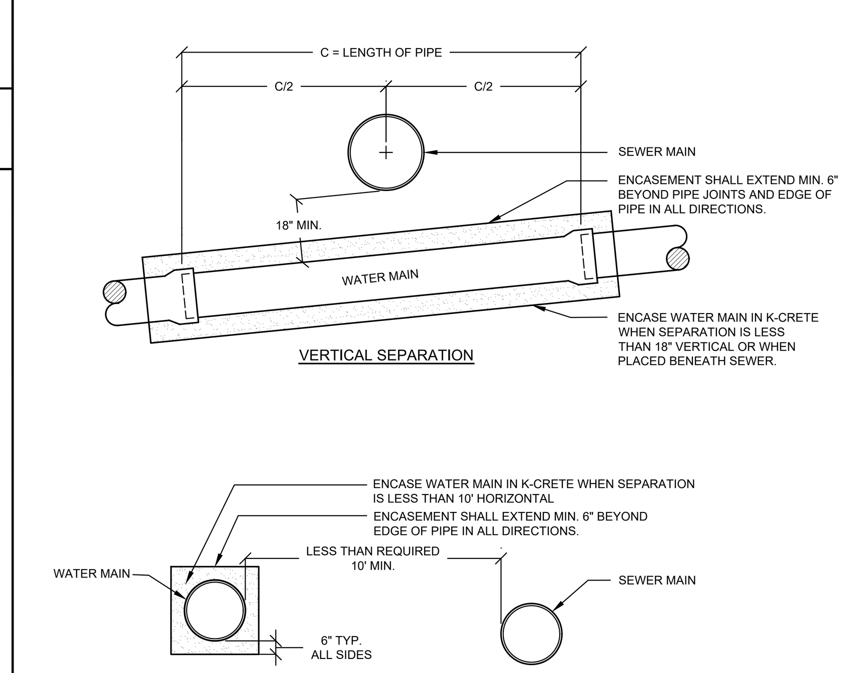

NOTES:
1. In the event that there is a deviation from any of the separation requirements, said changes or use of encasement must be approved by the Westchester County Department of Health.
2. Encasement of the water main shall apply only at locations where the minimum required separation distances can not be maintained or whenever a water main crosses beneath a sewer main.
3. Encasement of the water main shall be limited to those locations indicated on the plans.
4. Encasement shall be completed with k-crete having a minimum compressive strength of 50 psi.
5. One full length of sewer pipe shall be laid so both joints will be as far from the water main as possible.
6. Where the sewer has already been installed, the water main shall be placed so that the joints on the water main are equidistant from the sewer. No water pipe shall pass through or come in contact with any sewer manhole.

W-6 WATER MAIN ENCASEMENT DETAIL

NOT TO SCALE

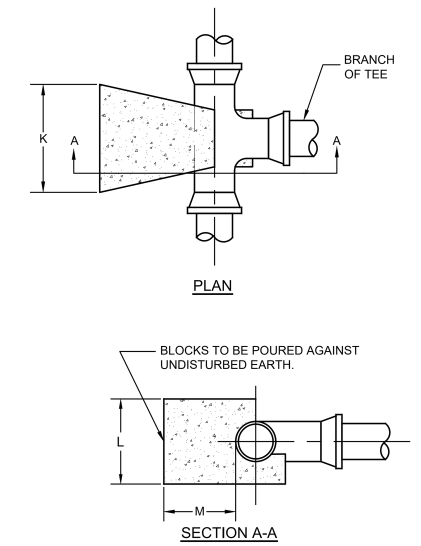

BRANCH SIZE IN.	BLOCK DIMENSIONS K IN.	L IN.	M IN.	CONCRETE VOLUME FT.³
6	18	16	12	2.4
8	30	18	12	4.0
10	42	20	12	6.3
12	50	24	16	11.3
16	60	36	24	30.0

NOTES:
1. Min. 2,500 psi concrete to be used.
2. Block dimensions are minimum and are based upon soil bearing pressure of 2,000 psf and water pressure of 150 psi. Where soil bearing is less or water pressure is greater, a special design will be required.
3. All bolts shall be covered with burlap before pouring concrete.

W-7 THRUST BLOCKING FOR TEES

NOT TO SCALE

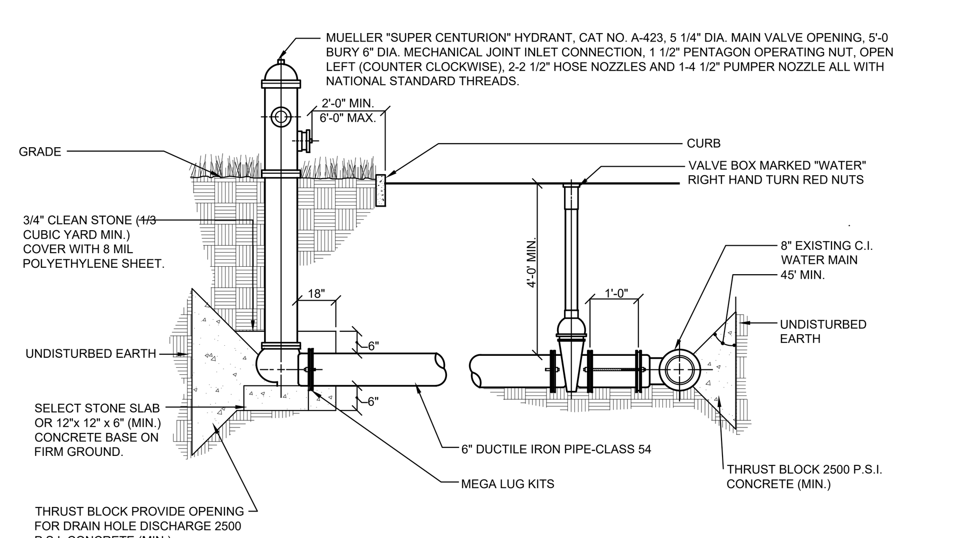

NOTES:
1. Retainer glands, concrete thrust blocks and tie rods shall be used at all locations where restraints are required.
2. If groundwater is encountered within 7 feet of grade, hydrant drain holes shall be plugged. When the drains are plugged the barrels must be pumped dry after use during freezing weather. Where hydrant drains are not plugged, a gravel pocket or dry well shall be provided unless the natural soils will provide adequate drainage. Hydrant drains shall not be connected to or located within 10 feet of sanitary sewers or storm drains.
3. If hydrant is within 10 feet of sewers, hydrant drain holes shall be plugged.
4. Hydrant shall be painted with two coats of Electro- Farrothane, plastic finish, No. 44 red paint.
5. All gate valves shall be Mueller AWWA standard.

W-3 FIRE HYDRANT DETAIL

NOT TO SCALE

NOTES:
1. Provide cleanouts as required (see detail).
2. Contractor to follow manufacture's installation guide.
3. The contractor shall be responsible for protecting all persons during construction from harm in accordance with all applicable codes, rules & regulations, standards and good practices.
4. Contractor to notify Town of Yorktown 48 hours in advance for trench inspection.
5. All fittings to be white H.D. as manufactured by GPK Products Inc. or approved equal.
6. For backfilling requirements of sewer service see "Sewer Main/Sewer Service Trench Detail".

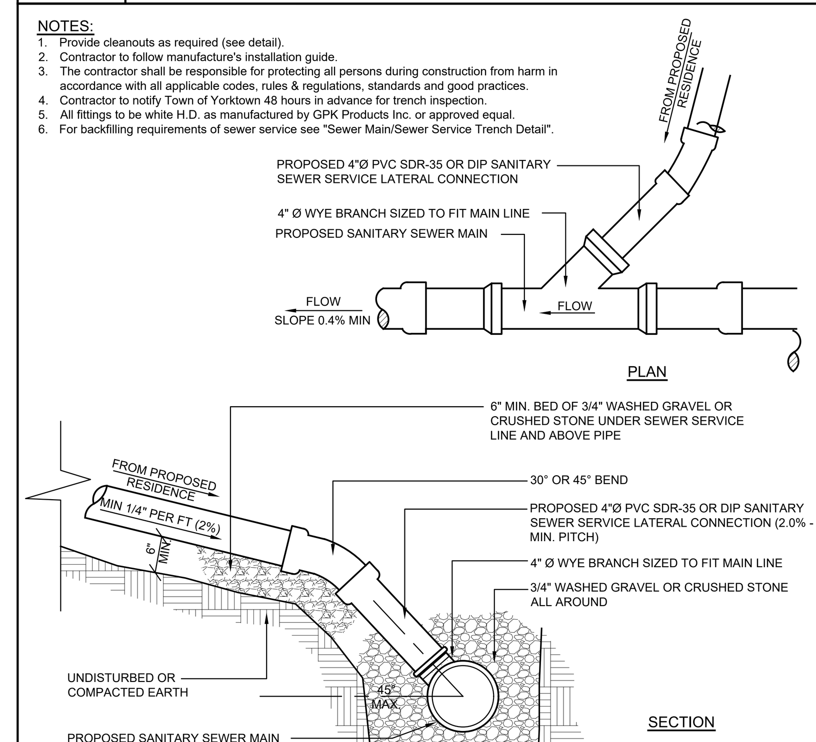

S-2 SEWER CONNECTION TO PROPOSED MAIN-LINE DETAIL

NOT TO SCALE

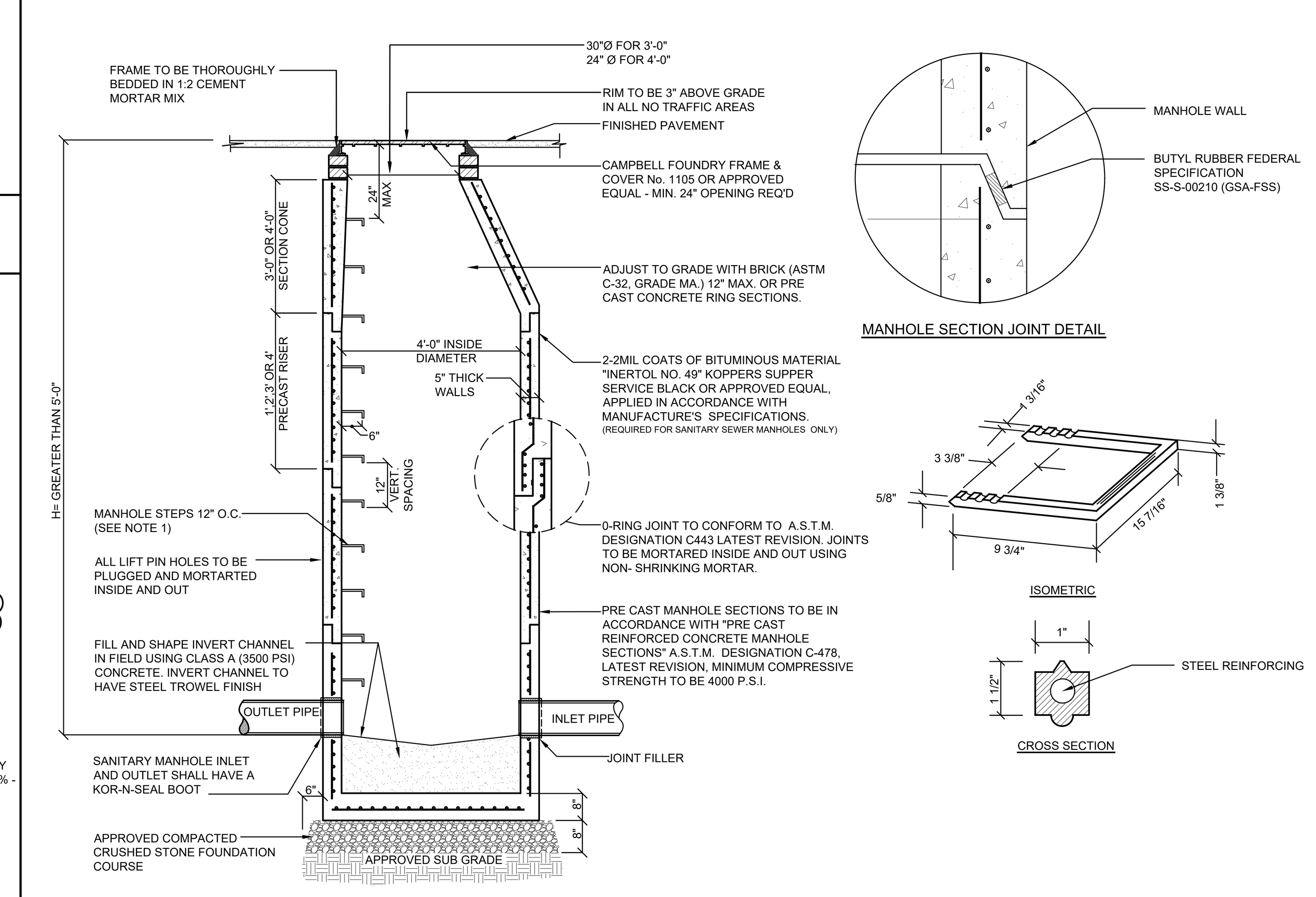

NOTES:
1. Manhole steps shall be cast iron Neenah No. R-1981-0 or Campbell Foundry no. 2588-1 or polypropylene coated steel (see specifications) or approved equal.
2. Unless otherwise specified, sanitary sewer manholes shall have letters "SEWER" and storm manholes shall have letters "DRAIN" cast on cover. The covers shall have vent holes.
3. Manholes shall meet or exceed A.S.T.M. and O.S.H.A. requirements and be rated for H-20 vehicle design loading.
4. All pipes shall be cut flush with inside walls.
5. Where depth of manhole exceeds 10 ft, inside diameter shall be 60 ".

S-6 PRECAST CONCRETE SEWER MANHOLE DETAIL

NOT TO SCALE

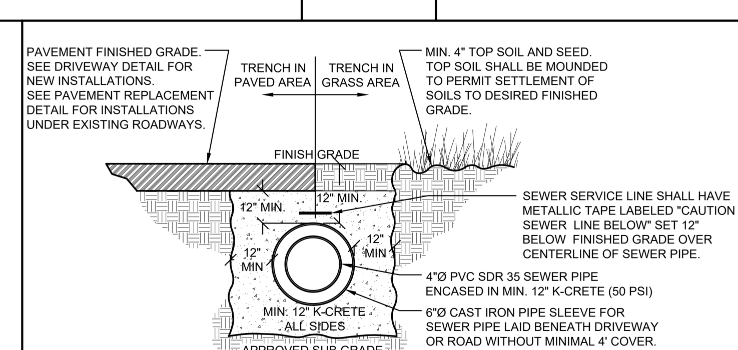

NOTES:
1. Pipe shall be laid and connected in the bedding which shall consist of:
   A. Compacted existing subsoil when laid above ground water or;
   B. 3/4" crushed stone when laid below ground water.
2. If subsoil is determined to be unsuitable by the engineer, all unsuitable material shall be removed for at least 2'-6" below the pipe invert or twice the pipe diameter, whichever is greater, and replaced with compacted bedding material.

S-3 SANITARY SEWER BEDDING DETAIL

NOT TO SCALE

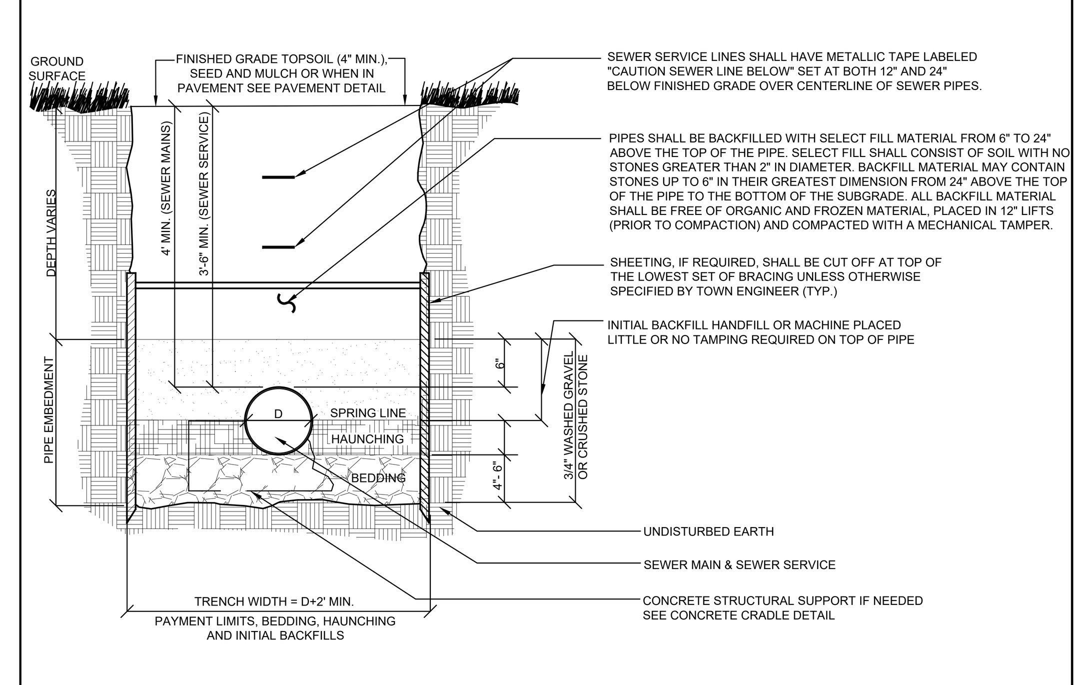

NOTES:
1. Sewer pipe shall be PVC SDR-35 in all cases except where depth of cover exceeds 10 ft. In cases where cover exceeds 10 ft, sewer pipe shall be a min. PVC SDR-26. When a sewer main is installed in a fill section, the fill shall be compacted to a min. 95% standard proctor and certified to the Town of Yorktown.
2. No rock is to project into within the edges of the trench. In rock excavation pipe shall be a min. of 6" over and away from rock.
3. Backfill shall be placed so as to not disturb the pipe alignment.
4. In areas where adequate cover can not be maintained for sewer main, proper protection shall be provided against freezing and superimposed loading.

S-4 SEWER MAIN / SEWER SERVICE TRENCH DETAIL

NOT TO SCALE

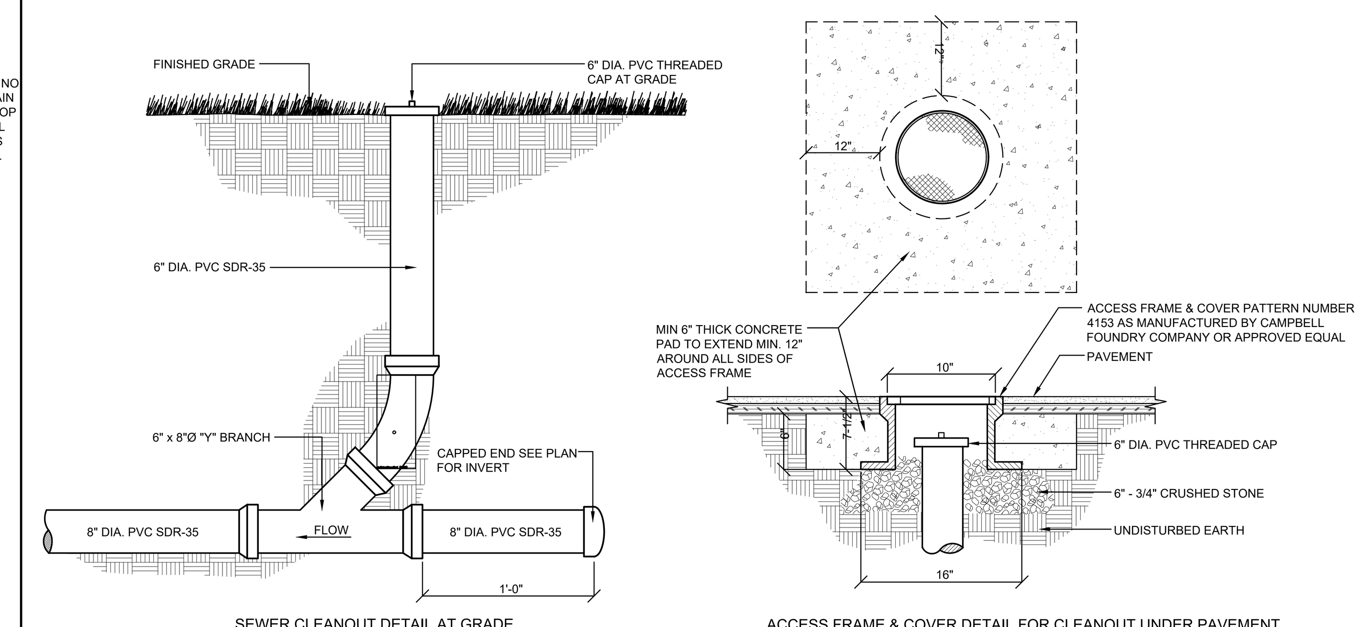

NOTES:
1. Clean-outs shall be spaced at minimum 50 ft intervals and/or at all changes in vertical and horizontal alignment.
2. All fittings to be white H.D. As manufactured by GPK Products Inc. or approved equal.

SAFE DIG
Before You Dig, Drill or Blast!
CALL US TOLL FREE 811 or 1-800-962-7962
NY Industrial Code Rule 753 requires no less than two working days notice, but not more than ten days notice.
www.digsafelynewyork.com

S-7 GRAVITY SEWER LATERAL CLEAN-OUT DETAIL

NOT TO SCALE

PROJECT # 23-18

Site Design Consultants
Civil Engineers • Land Planners
251-F Underhill Avenue, Yorktown Heights, NY 10598
(914) 962-4488 - Fax: (914) 962-7386
www.sitedesignconsultants.com

Engineer:
Joseph C. Riina, P.E.
NYS Lic. No. 64431

COPYRIGHT © 2025 BY SITE DESIGN CONSULTANTS, ALL RIGHTS RESERVED

Revisions: No.	Date	Comments:

Revisions: No.	Date	Comments:

SCALE:
DRAWN BY: AKM
DATE: 06/18/25

WATER SEWER DETAILS

SITE PLAN
PREPARED FOR
AMS YORKTOWN ACTIVE ADULT COMMUNITY
800 EAST MAIN STREET
Town of Yorktown Westchester County, NY

Sheet C-204

NOTE: UNAUTHORIZED ALTERATIONS OR ADDITIONS TO THIS DRAWING IS A VIOLATION OF SECTION 7209 (2) OF THE NEW YORK STATE EDUCATION LAW.

F:\2023\23-18 AMS - E MAIN STREET, YORKTOWN\ENGINEERING\CAD\C3D-23-18 AMS MAIN STREET YORKTOWN\23-18 AMS DETAILS.DWG 1/16/2017 3:19:52 PM