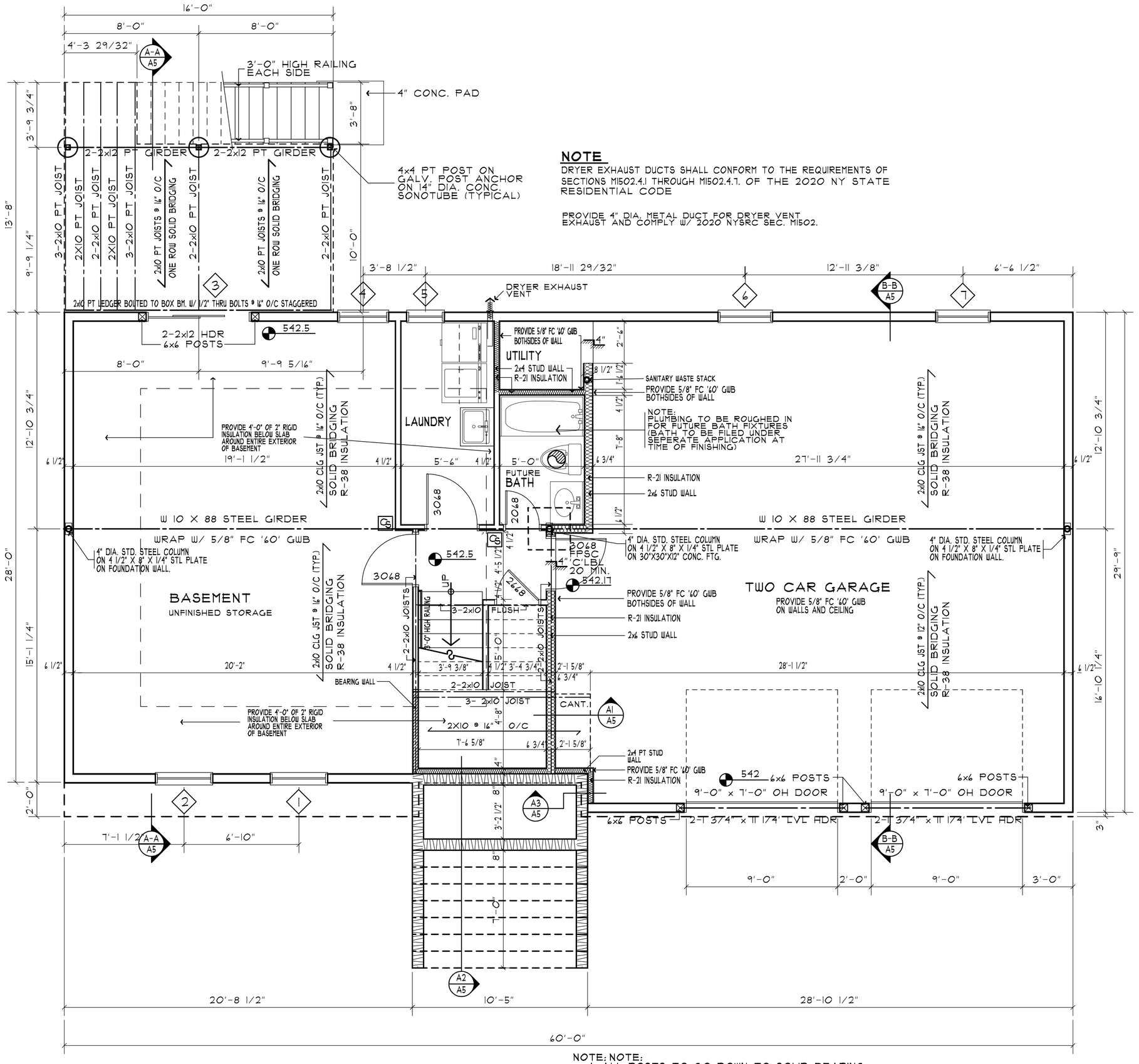

BASEMENT PLAN

SCALE: 1/4' = 1'-0"

NOTE

DRYER EXHAUST DUCTS SHALL CONFORM TO THE REQUIREMENTS OF SECTIONS M1502.4.1 THROUGH M1502.4.7. OF THE 2020 NY STATE RESIDENTIAL CODE

PROVIDE 4" DIA. METAL DUCT FOR DRYER VENT EXHAUST AND COMPLY W/ 2020 NYSRC SEC. M1502.

NOTE: NOTE:
1. ALL POSTS TO GO DOWN TO SOLID BEARING.

CO INDICATES CARBON MONOXIDE DETECTOR HARD WIRED WITH BATTERY BACK-UP WITH A SMOKE AND HEAT DETECTOR HARD WIRED WITH BATTERY BACK-UP INTEGRATED INTO THE SAME SYSTEM

INDICATES EXHAUST FAN - 90 CFM - DUCTED TO EXTERIOR

5 INDICATES WINDOW SCHEDULE DESIGNATION - SEE SECOND FLOOR WINDOW SCHEDULE ON SHEET - A-4

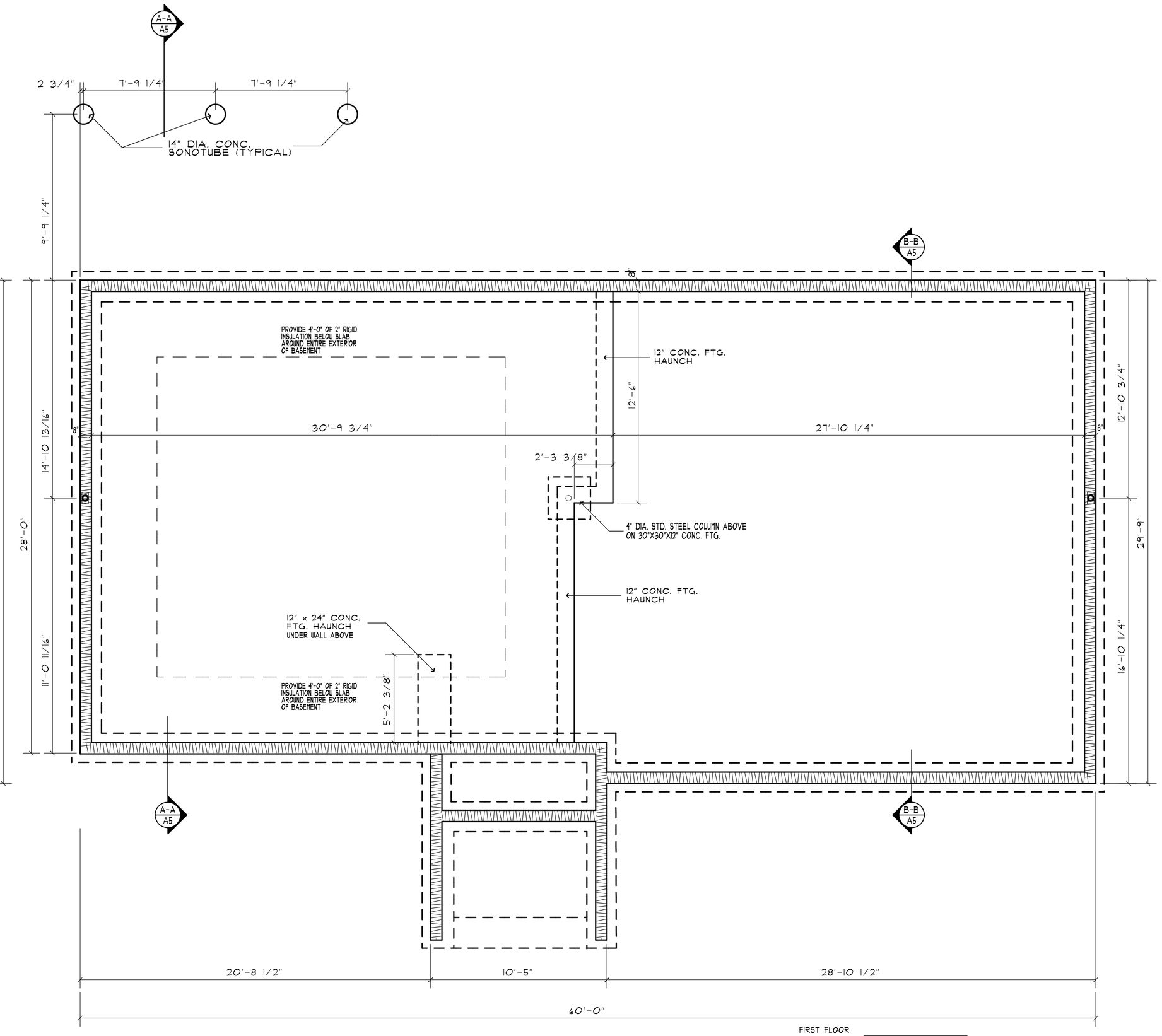

FOUNDATION PLAN

SCALE: 1/4' = 1'-0"

BASEMENT WINDOW SCHEDULE

PROVIDE = LOW E-4 GLAZING

	MANUFACTURER	TYPE	MFGR DESIGNATION	WINDOW DIMENSION	ROUGH OPENING	LOCATION	MEETS EGRESS	SCREEN	HARDWARE	GRILLE	U-FACTOR	NOTES
1	ANDERSEN	TILT WASH DOUBLE HUNG 400 SERIES	TW3046	3'-1 5/8" x 4'-8 7/8"	3'-2 1/8" x 4'-8 7/8"	FRONT WALL	YES	YES	CHOICE BY OWNER	NONE	0.28	
2	ANDERSEN	TILT WASH DOUBLE HUNG 400 SERIES	TW3046	3'-1 5/8" x 4'-8 7/8"	3'-2 1/8" x 4'-8 7/8"	FRONT WALL	YES	YES	CHOICE BY OWNER	NONE	0.28	
3	ANDERSEN	FRENCHWOOD GLIDER 400 SERIES	FWG6068L	5'-11 1/4" X 6'-7 1/2"	6'-0" x 6'-8"	REAR WALL	NO	YES	CHOICE BY OWNER	NONE	0.28	TEMPERED SAFETY GLASS
4	ANDERSEN	TILT WASH DOUBLE HUNG 400 SERIES	TW2846	2'-7 5/8" x 4'-8 7/8"	2'-8 1/8" x 4'-8 7/8"	REAR WALL	YES	YES	CHOICE BY OWNER	NONE	0.28	
5	ANDERSEN	TILT WASH DOUBLE HUNG 400 SERIES	TW20210	2'-1 5/8" x 3'-0 7/8"	2'-2 1/8" x 3'-0 7/8"	LAUNDRY	YES	YES	CHOICE BY OWNER	NONE	0.28	
6	ANDERSEN	TILT WASH DOUBLE HUNG 400 SERIES	TW21020	2'-11 5/8" x 3'-0 7/8"	3'-0 1/8" x 3'-0 7/8"	GARAGE	YES	YES	CHOICE BY OWNER	NONE	0.28	
7	ANDERSEN	TILT WASH DOUBLE HUNG 400 SERIES	TW21020	2'-11 5/8" x 3'-0 7/8"	3'-0 1/8" x 3'-0 7/8"	GARAGE	YES	YES	CHOICE BY OWNER	NONE	0.28	

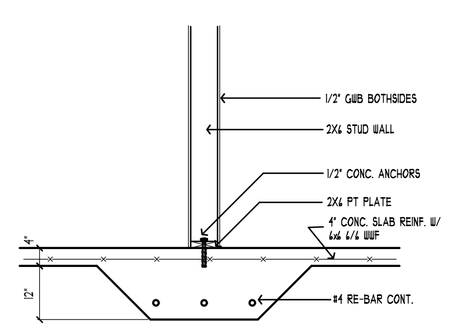

TYPICAL FOOTING HAUNCH DETAIL

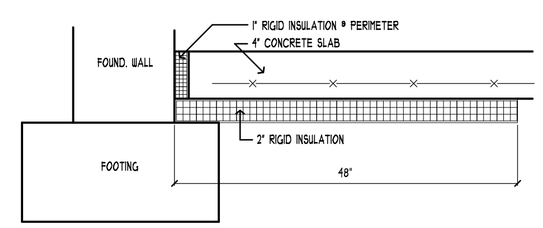

TYPICAL SLAB INSULATION DETAIL

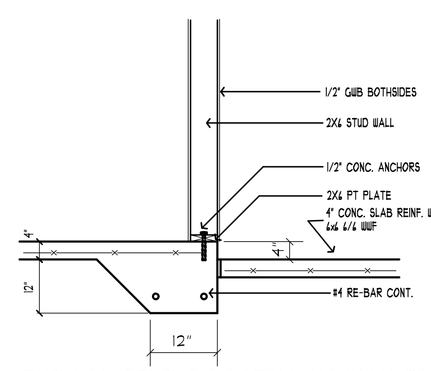

TYPICAL STEP @ FOOTING HAUNCH DETAIL

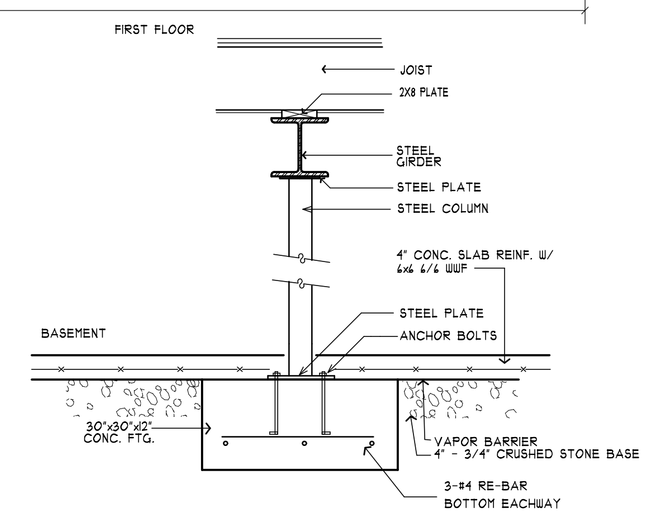

BASEMENT POST/FTG DETAIL

SCALE: 1"= 1'-0"

REVISIONS

P.C.D. ASSOCIATES
DESIGN CONSULTANTS
2506 KINGS WAY * CARMEL, NY 10512

STEVEN A. COSTA, P.E.
CONSULTING ENGINEER
756 PALISADE AVENUE ○ YONKERS, NEW YORK 10703

STATE OF NEW YORK * STEVEN ANTHONY COSTA * 100810 * LICENSED PROFESSIONAL ENGINEER

To the best of my knowledge, belief, and professional judgment of the design professional, Steven A. Costa P.E., the plans and specifications depicted on these drawings are in compliance with the applicable provisions of the New York State Uniform Fire Prevention and Building Code and the New York State Energy Conservation Construction Code, as currently in effect.

JOB TITLE
MASTRO RESIDENCE
1552 PAINE STREET
YORKTOWN HTS., NY

DRAWING TITLE
foundation and basement plan / details

DATE	2/10/25
SCALE	AS NOTED
DRAWN BY	PC
CHECKED BY	SAC
DRAWING NUMBER	A3